KEY COMPONENTS FOR POWER FACTOR CORRECTION IN 50Hz MAINS

FACTORY MATCHED TO OPERATE IN PERFECT HARMONY

ELECTRONICON®
always in charge

CHECK OUR SPECIAL CATALOGUE

MSD™ FKD-MV™ DSC™

FOR POWER FACTOR CORRECTION IN MEDIUM VOLTAGE MAINS:

CAPACITORS
AND OTHER KEY COMPONENTS FOR POWER FACTOR CORRECTION IN 50 Hz MAINS

ELECTRONICON KONDENSATOREN GMBH GERA · GERMANY

Issue 2025

CONTENTS

INTRODUCTION **6**
Basics of Power Factor Correction – Calculation of Required Capacitor Power and Common Methods – Influence of Harmonics, Harmonic Filtering – Capacitors in High Frequency Filters

OUR RANGE OF FACTORY MATCHED KEY COMPONENTS **13**

POWER CAPACITORS **14**

INTERNAL CONSTRUCTION 16
Dielectric – Impregnants - MKPg 275

SAFE OPERATION 17
Self-Healing Dielectric – Protection Against Accidental Contact – Protection Against Overload

TERMINATION DESIGNS 19
CAPAGRIP™ - MKP(D)

DEFINITIONS AND SELECTION CRITERIA 23
Voltage Ratings – Test Voltages – Rated Power – Current Ratings – Temperature Categories – Lifetime Statements

GENERAL TECHNICAL DATA 25

DATA CHARTS MKPg 275 3PH GAS-FILLED
400 ... 440 V 26
400 ... 480 V 27
400 ... 525 V 28
525 V 28
400 ... 525 V 29
690 ... 760 V 30
690 ... 800 V 30

DATA CHARTS MKP UHD™ 280 3PH OIL-FILLED
400 ... 580 V 31

DATA CHARTS MKP(D) 276 3PH OIL-FILLED
400 ... 480 V 32
400 ... 525 V 32

DATA CHARTS MKP-1 276 1PH OIL-FILLED
400 ... 480 V 33
400 ... 525 V 33

CONTENTS

MOUNTING AND OPERATING INSTRUCTIONS 34
Mounting Position – Mounting Location/Cooling – Vibration Stress – Connection – Selection of Cables – Termination Torques – Discharge – Earthing – Environment – Disposal

SWITCHING AND DISCHARGING CAPACITORS 38

CAPACITOR CONTACTORS 40
1301A Series 40

THYRISTOR SWITCHES 42
CONDENSOTRONIC CT 2000 43
TS12-2 45

DISCHARGE DEVICES & ACCESSORY PARTS 47
RESISTOR MODULES 47
DISCHARGE REACTOR EL–Dr 51
PROTECTIVE CAPS 52

DETUNING REACTORS 54

DEFINITIONS AND SELECTION CRITERIA 57
Rated Inductance – Rated Voltage – Capacitor Voltage – Detuning Factor – Series Resonance Frequency – Rated Reactor Power – Dissipation Power – Rated Current – RMS Current – Maximum Current Rating – Ambient Operating Conditions – Insulation Class – Temperature Switch

GENERAL TECHNICAL DATA 61

DIMENSION DRAWINGS 62

DATA CHARTS FK-DR
non-adapted rating (D) 7 %/5.67 % 66
adapted rating (Dla) 7 % 67
adapted rating (Dla) 5.67 %/14 % 68

POWER FACTOR CONTROLLERS 70
PFR-X/PFR-M

ANNEX 75
Safety Recommendations – Certificates – Packing Details

INTRODUCTION

BASICS OF POWER FACTOR CORRECTION

Under normal operating conditions certain electrical loads (e.g. induction motors, welding equipment, arc furnaces and fluorescent lighting) draw not only active power from the supply, but also inductive reactive power (kvar). This reactive power is necessary for the equipment to operate correctly but could be interpreted as an undesirable burden on the supply. The power factor of a load is defined as the ratio of active power to apparent power, i.e. kW : kVA and is referred to as cosφ. The closer cosφ is to unity, the less reactive power is drawn from the supply.

A capacitive reactive power resulting from the connection of a correctly sized capacitor can compensate for the inductive reactive power required by the electrical load. This ensures a reduction in the reactive power drawn from the supply and is called Power Factor Correction.

CALCULATION OF REQUIRED CAPACITOR POWER

The reactive power which is necessary to achieve a desired power factor is calculated by the formula: $Q_c = P \cdot F$

Q_c ...reactive power of the required power capacitor
P ... active power of the load to be corrected
F ... conversion factor acc. to chart 1

original power factor $\cos\varphi_1$	conversion factor F for a target power factor $\cos\varphi_2$									
	0.70	**0.75**	**0.80**	**0.85**	**0.90**	**0.92**	**0.94**	**0.96**	**0.98**	**1.00**
0.20	3.879	4.017	4.149	4.279	4.415	4.473	4.536	4.607	4.696	4.899
0.25	2.853	2.991	3.123	3.253	3.389	3.447	3.510	3.581	3.670	3.873
0.30	2.160	2.298	2.430	2.560	2.695	2.754	2.817	2.888	2.977	3.180
0.35	1.656	1.795	1.926	2.057	2.192	2.250	2.313	2.385	2.473	2.676
0.40	1.271	1.409	1.541	1.672	1.807	1.865	1.928	2.000	2.088	2.291
0.45	0.964	1.103	1.235	1.365	1.500	1.559	1.622	1.693	1.781	1.985
0.50	0.712	0.85	0.982	1.112	1.248	1.306	1.369	1.440	1.529	1.732
0.55	0.498	0.637	0.768	0.899	1.034	1.092	1.156	1.227	1.315	1.518
0.60	0.313	0.451	0.583	0.714	0.849	0.907	0.97	1.042	1.130	1.333
0.65	0.149	0.287	0.419	0.549	0.685	0.743	0.806	0.877	0.966	1.169
0.70		0.138	0.27	0.4	0.536	0.594	0.657	0.729	0.817	1.020
0.75			0.132	0.262	0.398	0.456	0.519	0.59	0.679	0.882
0.80				0.13	0.266	0.324	0.387	0.458	0.547	0.75
0.85					0.135	0.194	0.257	0.328	0.417	0.62
0.90						0.058	0.121	0.193	0.281	0.484
0.95								0.037	0.126	0.329

chart 1

Example

A. Calculation based on the consumption data

- consumption of active energy: E_W = 300.000 kWh
- consumption of reactive energy: E_B = 400.000 kvarh
- number of working hours: t = 600 h

1) Calculation of average active power P

$$P = \frac{E_W}{t} = \frac{300.000\ \text{kWh}}{600\ \text{h}} = 500\ \text{kW}$$

2) Calculation of initial power factor $\cos\varphi_1$

$$\cos\varphi_1 = \frac{1}{\sqrt{\left(\frac{E_B}{E_W}\right)^2 + 1}} = \frac{1}{\sqrt{\left(\frac{400{,}000\ \text{kvar}}{300{,}000\ \text{kWh}}\right)^2 + 1}} = 0.6$$

3) From chart 1, we read the factor 1.13 for the improvement of the power factor from 0.6 to 0.98.

4) Calculation of required capacitor power

$$Q_c = 500\ \text{kW} \cdot 1.13 = 565\ \text{kvar}$$

B. Calculation based on the Energy Bill

- reactive power tariff: T/kvarh
- monthly costs for reactive energy: C
- number of working hours: h

Calculation of required capacitor power for $\cos\varphi = 1$

$$Q_c = \frac{C}{h \cdot \frac{T}{\text{kvarh}}}$$

COMMON METHODS OF POWER FACTOR CORRECTION

SINGLE OR FIXED PFC, compensating for the reactive power of individual inductive loads at the point of connection so reducing the load in the connecting cables (typical for single, permanently operated loads with a constant power),

constant power demand and long duty cycle → single- or group-fixed PFC

GROUP PFC - connecting one fixed capacitor to a group of simultaneously operated inductive loads (e.g. group of motors, discharge lamps),

variable power demand and/or variable duty cycle → automatic ("bulk") PFC

BULK PFC, typical for large electrical systems with fluctuating load where it is common to connect a number of capacitors to a main power distribution station or substation. The capacitors are controlled by a microprocessor based relay which continuously monitors the reactive power demand on the supply. The relay connects or disconnects the capacitors to compensate for the actual reactive power of the total load and to reduce the overall demand on the supply.

A typical power factor correction system would incorporate a number of capacitor sections determined by the characteristics and the reactive power requirements of the installation under consideration. Sections of 12.5 kvar, 25 kvar, and 50 kvar are usually employed. Larger stages (e.g. 100 kvar and above) are best achieved by cascading a number of smaller sections. This has the beneficial effect of reducing fluctuations in the mains caused by the inrush currents to the capacitors and minimizes supply disturbances. Where harmonic distortion is of concern, appropriate systems are supplied incorporating detuning reactors.

INFLUENCE OF HARMONICS, HARMONIC FILTERING

Developments in modern semiconductor technology have led to a significant increase in the number of thyristor- and inverter-fed loads. Unfortunately these non-linear loads have undesirable effects on the incoming AC supply, drawing appreciable inductive reactive power and a non-sinewave current. The supply system needs to be kept free of this harmonic distortion to prevent equipment malfunction.
A typical inverter current is composed of a mixture of sinewave currents; a fundamental component at the supply frequency and a number of harmonics whose frequencies are integer multiples of the line frequency (in three phase mains most of all the 5th, 7th, and 11th harmonic). The harmonics lead to a higher capacitor current, because the reactive resistance of a capacitor reduces with rising frequency. The rising capacitor current can be accommodated by constructional improvements in the manufacture of the capacitor. However a resonating circuit between the power factor correction capacitors, the inductance of the feeding transformer and/or the mains may occur. If the frequency of such a resonating circuit is close enough to a harmonic frequency, the resulting circuit amplifies the oscillation and leads to immense over-currents and over-voltages.

Harmonic distortion of an AC supply can result in any or all of the following:

- Premature failure of capacitors.
- Nuisance tripping of circuit breakers and other protective devices.
- Failure or maloperation of computers, motor drives, lighting circuits and other sensitive loads

Typical non-linear loads (generating harmonics)

- converters, rectifiers, inverters, choppers
- thyristor controls, three-phase controllers
- electronic valves
- phase controls
- UPS units (inverter technology)
- discharge lamps with magnetic ballasts

WHEN IS IT NECESSARY TO INSTALL A DETUNED PFC SYSTEM?

The installation of detuned (reactor-connected) capacitors is designed to force the resonant frequency of the network below the frequency of the lowest harmonic present, thereby ensuring no resonant circuit and, by implication, no amplification of harmonic currents. Such an installation also has a partial filtering effect, reducing the level of voltage distortion on the supply, and is recommended for all cases where the share of harmonic-generating loads ("non-linear loads") is more than 10% of the rated transformer power. The resonance frequency of a detuned capacitor is always below the frequency of the lowest harmonic present. A close-tuned filter circuit however is tuned to a certain harmonic frequency and presents a very low impedance to the individual harmonic current, diverting the majority of the current into the filter bank rather than the supply.

Detuned capacitors can in general be operated in any mains. In any case, they are a safer choice than non-detuned capacitors and future-proof under the conditions of more and more deteriorating power quality in modern mains.

Attention: Non-detuned and detuned capacitors must never be combined together.

We strongly advise to conduct a comprehensive mains analysis, including measurement of the harmonic content, before designing and installing your power factor correction equipment. In cases, however, where such analysis is not possible, cautious and conservative assessment of the situation to be expected shall be made by means of the general rules in chart 3.

A detuned PFC system is also necessary
- if one or more harmonic voltages in the MV mains are > 2 %, and/or
- if certain audio frequency control signals are used (see page 8)

$S_{OS} : S_T$	Detuning
0 % ... 100 %	non-detuned
> 10 % ... 50 %	detuned
> 40 % ... 100 %	detailed calculation needed, installation of filter circuit if necessary

Abbreviations
S_{OS} ... power of harmonic generating („non-linear") loads in the own network
S_T ... rated transformer power or connection power

chart 3

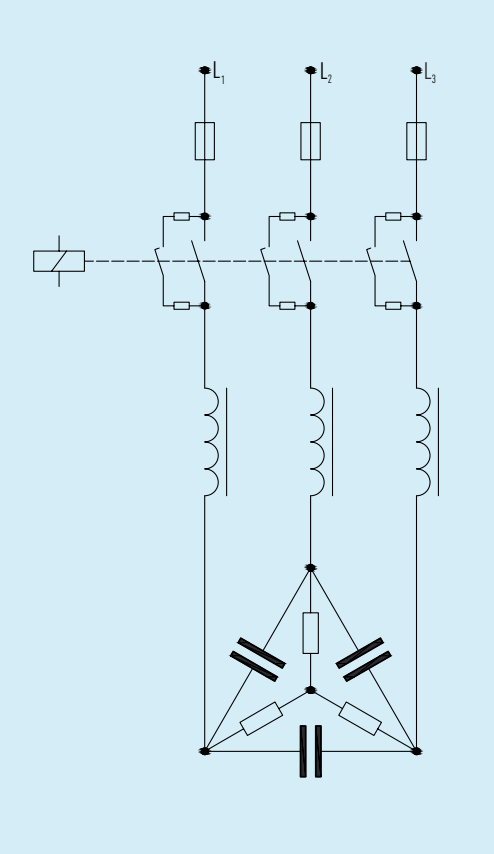

pic. 1

Installation of detuned (reactor-connected) capacitors

DOES THE MV MAINS CONTAIN AUDIO FREQUENCY CONTROL SIGNALS?

Some energy supply companies use higher-frequency signals in their medium voltage mains for the transmission of control pulses and data. These so-called "audio frequency signals" ranging typically from 160 to 1350 Hz may become absorbed or distorted by, or cause resonance problems with capacitor installations. Such problems may be prevented by the selection of proper detuning reactors.

Capacitor/PFC system	audio frequency	reactive power	activity
non-detuned	< 250 Hz	Q_C < 35 % of S_T	no specific activity
		Q_C > 35 % of S_T	consult your power supply company and conduct mains analysis
	> 250 Hz	Q_C < 10 kvar	no specific activity
		Q_C > 10 kvar	consult your power supply company and consider special PFC system
detuned	< 250 Hz	no restrictions	consult your power supply company and consider special PFC system
	250 Hz ... 350 Hz	no restrictions	detuning factor > 7 %
	> 350 Hz	no restrictions	detuning factor > 5 %

chart 4

OPERATION OF CAPACITORS IN HIGH-FREQUENCY-FILTERS OR WITH A VERY HIGH SHARE OF LF OR HF HARMONICS

Capacitors which are operated in filters or other systems with a very high share of harmonic distortion, or with harmonics of high frequencies, must be especially selected and prepared for the specific requirements of such applications.

We offer special single and three phase capacitors that are optimized for the operation under such circumstances in our following ranges:

- 280 MKP-UHD: three phase Ultra Heavy Duty capacitors for demanding operating conditions in power factor correction (such as high harmonic content and high operating temperatures), see page 31
- E62-3ph: three phase capacitors for filters with harmonic frequencies of up to 1.3 kHz
- E62-3HF: three phase capacitors for filters with harmonic frequencies of >1.3 kHz
- E62: single phase capacitors for filters with substantial unbalanced loads.

Consult our catalogue brochures for details of the a.m. capacitor ranges. Please refer also to our Application Notes for specific instructions and formulas related to high frequency filters.

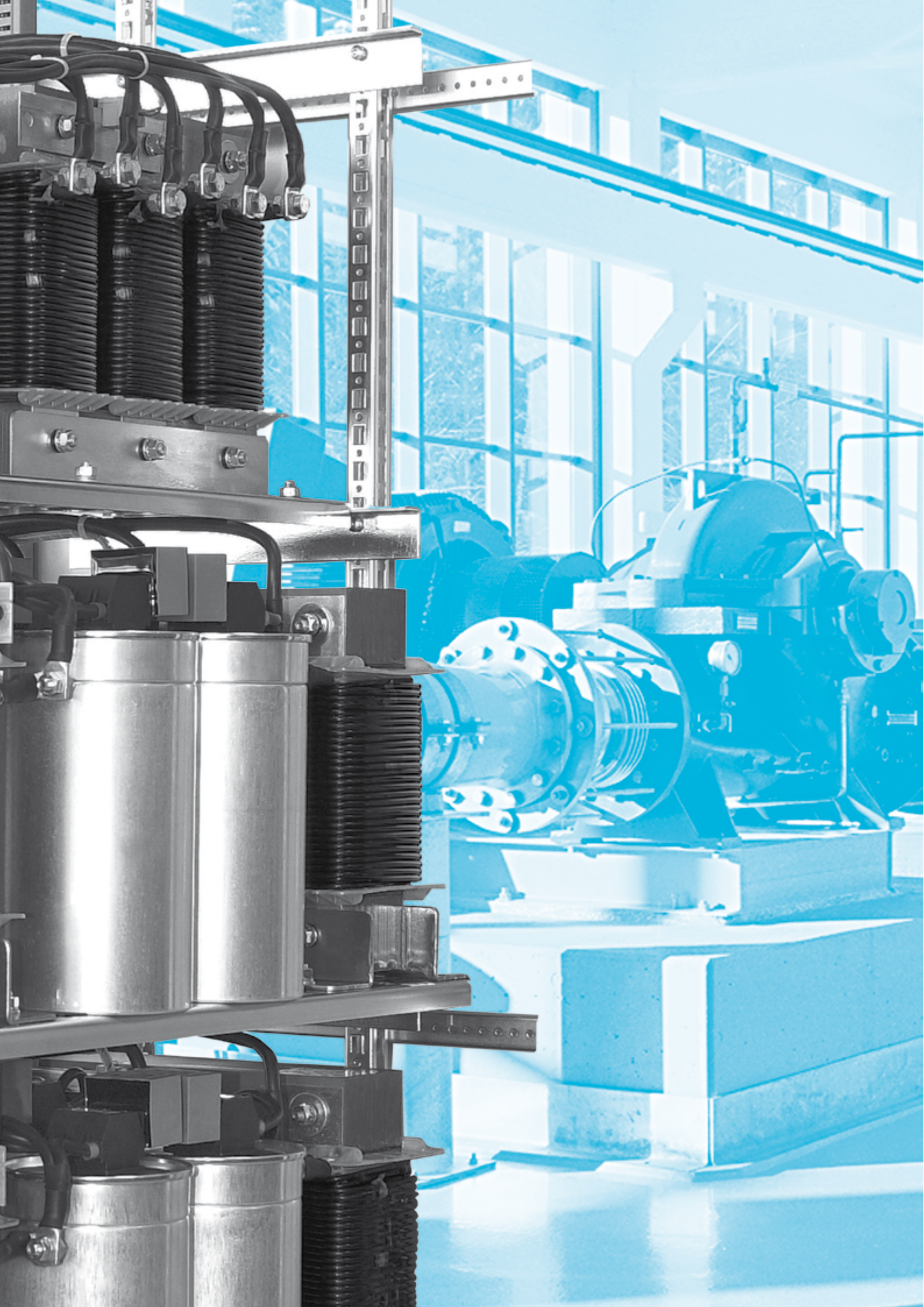

FACTORY MATCHED TO WORK IN PERFECT HARMONY. ALL KEY COMPONENTS FROM ONE SOURCE.

The construction of reliable equipment for power factor correction requires not only your excellent experience, but also top-class components. No compromise in quality and safety should be permitted when it comes to the key parts of your PFC equipment. Because we do care, we are offering you the full set of essential components for your capacitor bank.

THE HEART:

Capacitors. Without them, PFC is impossible. They are the most sensitive and most important component.

Pages 14 to 37

THE MUSCLE:

Switching is one of the key functions in your PFC, and switching capacitors means maximum stress.

Pages 38 to 52

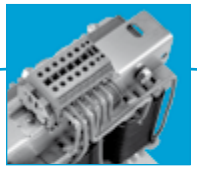

THE PROTECTION:

Most PFC nowadays cannot do without detuning reactors for harmonic protection anymore.

Pages 54 to 68

THE BRAIN:

The controller shall know what to do, and when.

Pages 70 to 74

POWER CAPACITORS

Apart from your excellent experience, the construction of reliable and competitive equipment for power factor correction requires top-class components at reasonable cost. No compromise in quality and safety should be permitted when it comes to the key part of your PFC equipment. Germany's largest manufacturer of power capacitors manufactures all components with highest care and expertise and is your best choice for power capacitors.

The dry-type phase shifters of our renowned MKPg™-series are environmentally friendly, compact, and very convenient to handle. They contain no liquids, are filled with a neutral, inert gas entirely harmless to environment and may be mounted in any desired position. Should leakage occur, the leaking gas would escape into the atmosphere causing no undesirable effects to the adjacent equipment, e.g. damage, pollution, or staining. Hence when disposing of the capacitors, no liquids or toxic gasses need to be considered. The plant oil in our MKP(D) and MKP-UHD capacitors is biodegradable and does not cause any trouble either, be it in the unlikely event of leakage or during disposal.

All our three-phase capacitors contain three separate capacitor elements connected in delta, preferably of short height and large diameter which substantially reduces inherent power losses and improves their current strength as compared with slim, tall capacitors. By using the market's best low-loss, self-healing polypropylene films and sophisticated manufacturing techniques such as high-vacuum drying and special coating patterns, they provide long service life with constant capacitance and high switching strength. As a matter of course, all our power capacitors are provided with BAM™ (overpressure break-action mechanism) as standard, for safe mode of failure.

Our original CAPAGRIP™ terminals guarantee optimum sealing of the capacitors, and offer convenient connection of cables up to 50mm^2. A special spring system guarantees reliable and durable operation of the clamp. They are rated IP20, i.e. protected against accidental finger contact with live parts. Whilst the options K and L4 ("CAPAGRIP II") include bleeding resistors for a discharge below 50 V within up to 60 sec as standard, options L and M also permit the direct connection of discharge reactors and discharge resistor modules, as well as easy parallel connection of additional capacitors within the current limits of the terminal.

POWER CAPACI-TORS

INTERNAL CONSTRUCTION

Dielectric

MKP-/MKPg-type capacitors are based on a low-loss dielectric formed by pure polypropylene film. A thin mixture of zinc and aluminium is metallized directly on one side of the PP-film under vacuum. Our long term experience as well as on-going research and improvements in this technology ensure the excellent self-healing characteristics of the dielectric and a long operating life of our capacitors. The plastic film is wound into stable cylindrical windings on the most modern automated equipment. The ends of the capacitor windings are contacted by spraying with a metal contact layer, facilitating a high current load and ensuring a low-inductance connection between the terminals and windings.

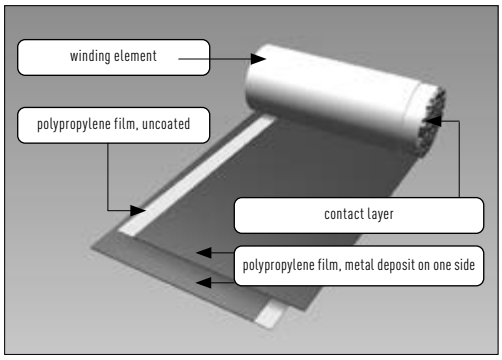

pic.2

The link between PP-film and zinc contact layer is highly stressed during high surge or rms currents and therefore considered very critical for operating life and reliability of the capacitor. By cutting the film for selected types in a wavelike manner, our SINECUT™ technology increases the contact surface between film and zinc layer which substantially reduces this strain.

Impregnants

The use of impregnants and/or filling materials in capacitors is necessary in order to insulate the capacitor electrodes from oxygen, humidity, and other environmental interference. Without such insulation, the metal coating would corrode, an increasing number of partial discharges would occur, the capacitor would lose more and more of its capacitance, suffer increased dielectric losses and a reduced operating life. Therefore, an elaborate vacuum-drying procedure is initiated immediately after insertion of the capacitor elements into the aluminium case and dried insulation gas (MKPg), or biologically degradable plant oil (MKP(D), MKP-UHD), is introduced. Both protect the winding from environmental influence and provide an extended life-expectancy and stable capacitance.

MKPg 275 – Leakage Proof and Environmentally Friendly

The gas in our MKPg-Capacitors is inert and entirely harmless to environment. When disposing of the capacitors, no liquids or toxic gasses need to be considered. Leakage of gas is extremely unlikely if the capacitors are handled and operated properly. It is possible to mount these capacitors in any desired position. However, should leakage occur, the leaking gas would escape into the atmosphere causing no undesirable effects to the adjacent equipment, e.g. damage, pollution, or staining. In the long run, such an unlikely event would result in a degradation of the capacitance; however, this process would take many months, during which the capacitor remains functional. By using gas, we are reducing the weight of a capacitor on average by 15% compared with resin or oil filled capacitors. This makes transportation and handling of the units easier. It also supports the concept of mounting the capacitors in almost any position.

SAFE OPERATION

Protection against Overvoltages and Short Circuits: Self-Healing Dielectric

All dielectric structures used in our power capacitors are "self-healing": In the event of a voltage breakdown the metal layers around the breakdown channel are evaporated by the temperature of the electric arc that forms between the electrodes. They are removed within a few microseconds and pushed apart by the pressure generated in the centre of the breakdown spot. An insulation area is formed which is reliably resistive and voltage proof for all operating requirements of the capacitor. The capacitor remains fully functional during and after the breakdown.

For voltages within the permitted testing and operating limits the capacitors are short-circuit- and overvoltage proof. They are also proof against external short circuits as far as the resulting surge discharges do not exceed the specified surge current limits.

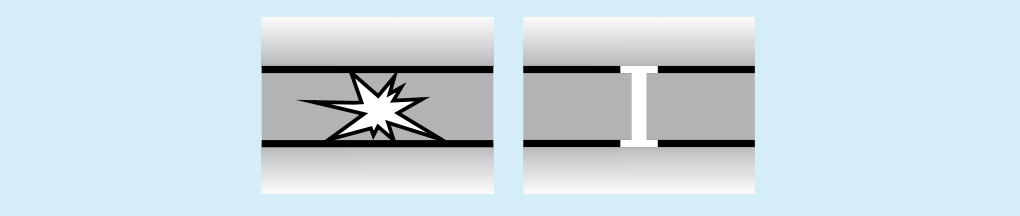

Self-healing breakdown

pic.3

Protection Against Accidental Contact

All capacitors are checked by routine test (voltage test between shorted terminations and case: $U_{BG} > 2\ U_N + 2000$ V, at least 3000V) in accordance with IEC 60831. Accessible capacitors must be earthed at the bottom stud or with an additional earthing clamp.

The CAPAGRIP™ terminal blocks are rated IP20, i.e. they are protected against accidental finger contact with live parts. The discharge modules are designed in the same way (compare page 48). Unused contact cages of design M terminal blocks must be covered by a proper blank (available as standard accessory, see page 52).

CAPA**GRIP**™

Capacitors in design D are not provided with protection against accidental contact as standard. They are available with protective caps on request (see page 52).

Protection against Overload and Failure at the end of Service Life

In the event of overvoltage, thermal overload or ageing at the end of the capacitor's useful service life, an increasing number of self-healing breakdowns may cause rising pressure inside the capacitor. To prevent it from bursting, the capacitor is fitted with an obligatory **«break action mechanism» (BAM™)**. This safety mechanism is based on an attenuated spot at one, two, or all of the connecting wires inside the capacitor.

All capacitors with diameters < 85 mm as well as some traditional models with large diameters are provided with BAM 1 mechanism. All new models with diameters > 85 mm will be provided with BAM 2 mechanism.

With rising pressure the case begins to expand, mainly by opening the folded crimp and pushing the lid upwards. As a result, the prepared connecting wires are separated at the attenuated spot, and the current path is interrupted irreversibly. It has to be noted that this safety system can act properly only within the permitted limits of loads and overloads.

BAM 1

BAM 2

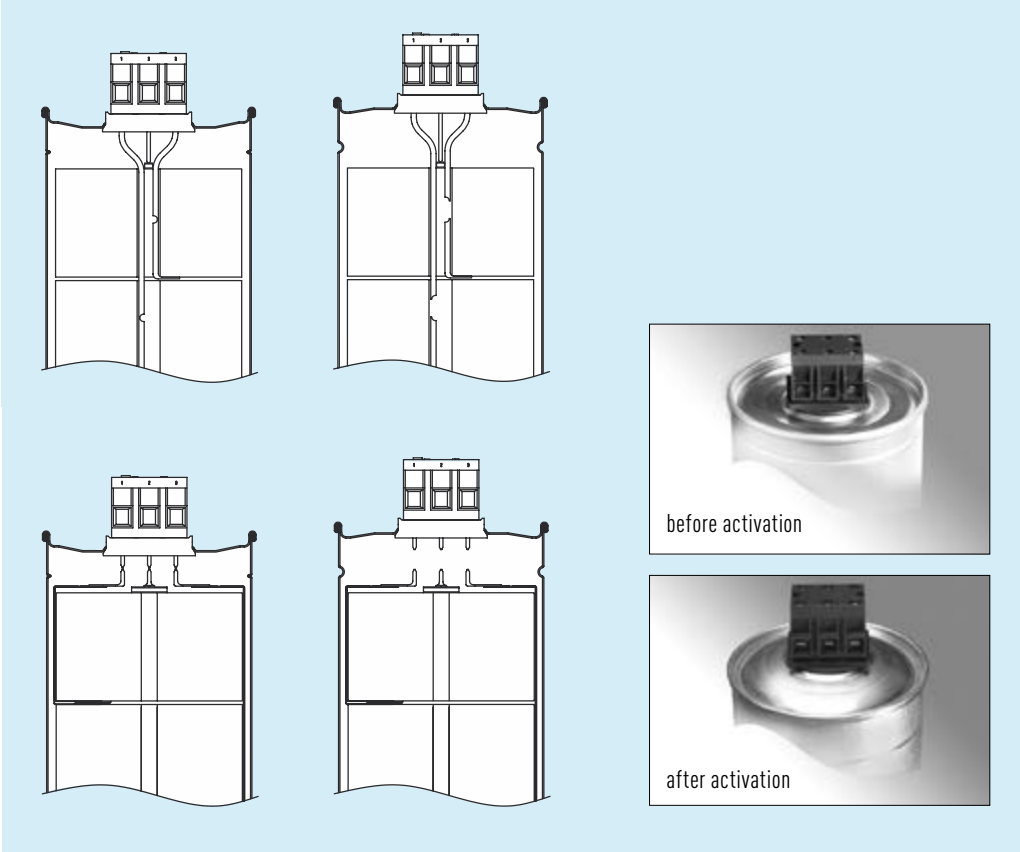

pic.4

Mind hazards of explosion and fire

Capacitors consist mainly of polypropylene (up to 90 %), i.e. their energy content is relatively high. They may rupture and ignite as a result of internal faults or external overload (e.g. temperature, over-voltage, harmonic distortion). It must therefore be ensured, by appropriate measures, that they do not form any hazard to their environment in the event of failure or malfunction of the safety mechanism.

Fire Load: approx. 40 MJ/kg

Extinguish with: dry extinguisher (CO_2, foam), or other fire extinguishants suitable for this voltage level

DESIGN DRAWINGS

CAPAGRIP™ K, L, M AND CAPAGRIP II™: EASE OF ASSEMBLY WITH HIGH DEGREE OF PROTECTION

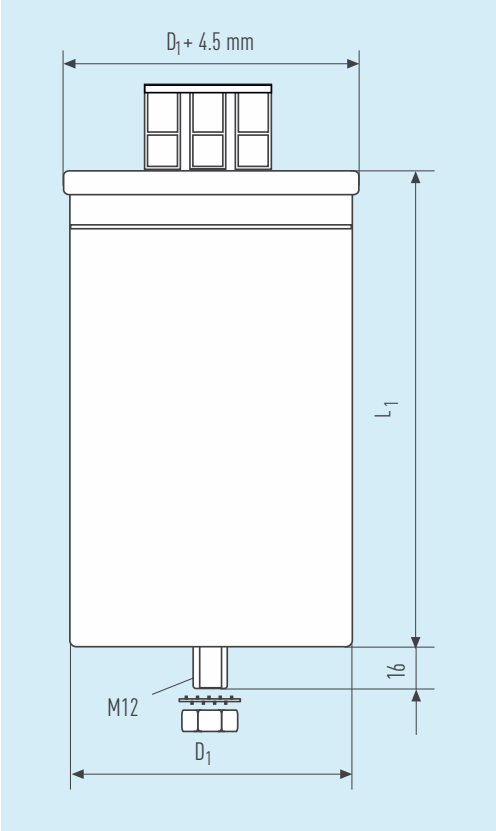

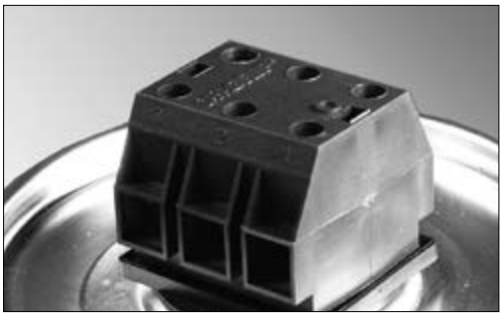

The CAPAGRIP™ terminals guarantee optimum sealing of the capacitors, and offer convenient connection of cables up to 50 mm². A special spring system guarantees reliable and durable operation of the clamp.
Whilst CAPAGRIP™ K and CAPAGRIP II™ ("L4") incorporate bleeding resistors, designs L and M permit the direct connection of discharge reactors and discharge resistor modules, as well as easy parallel connection of additional capacitors within the limits of the current capability of the respective terminal.
For single phase versions, the central screw has no contact.

Series	**MKPg 275, MKP 276, MKP-UHD**
Protection	IP20
Humidity class	C
Creepage distance	16 mm
Air clearance	16 mm

If flat over the entire width of the cage, the body inserted into the terminal must have a thickness of at least 1.2 mm in order to get gripped and fixed by the clamp cage. See chart 5 for minimum thickness of inserted conductor if round-shaped and/or NOT ranging over the entire width of the cage.
See also chart 9 on page 36 for more detailed instructions on connectors and cable sizes.

CAPAGRIP™	Clamp width	minimum conductor height (if < 0.8 × clamp width)
K	5	2
L, L4	7	2.5
M	10	2.5

chart 5

DESIGN DRAWINGS

CAPA**GRIP**™K

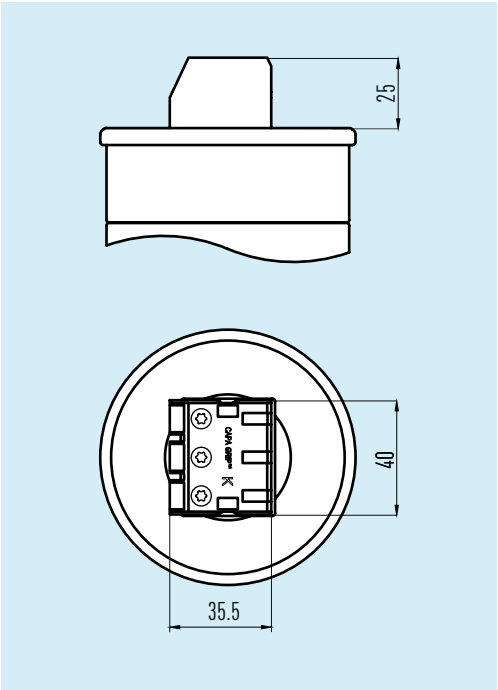

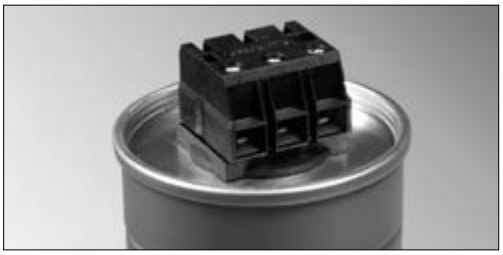

Available for diameters 60 ... 85 mm.

Case
extruded aluminium can with base mounting stud M12, hermetically sealed by aluminium lid (folded edge)

Terminal block
Steel clamp with T20 M4 screws in flame retardant plastic body (UL94:V0)
max. cable cross section: 1 × 10 mm² per phase
max. terminal rating: 39 A/phase

Internal resistors for discharge < 50 V within < 60 s

CAPA**GRIP**II™L4

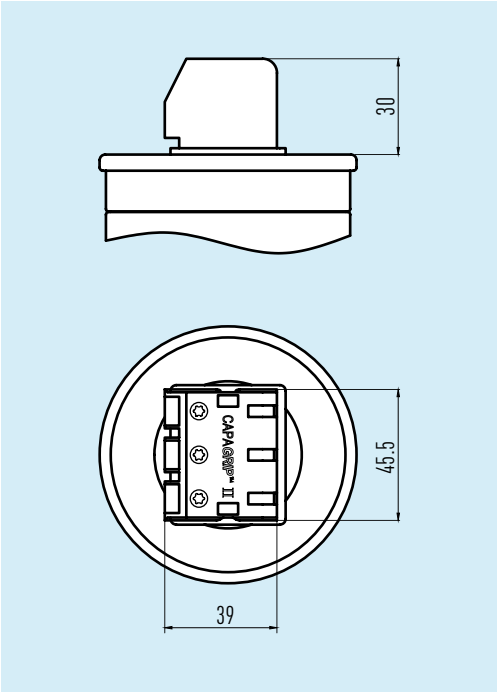

Available for diameters 85 ... 136 mm.

Case
extruded aluminium can with base mounting stud M12, hermetically sealed by aluminium lid (folded edge)

Terminal block
Steel clamp with T20 M5 screws in flame retardant plastic body (UL94:V0)
max.cable cross section: 1 × 25 mm² per phase
max. terminal rating: 56 A/phase

Internal resistors for discharge < 50 V within < 60 s

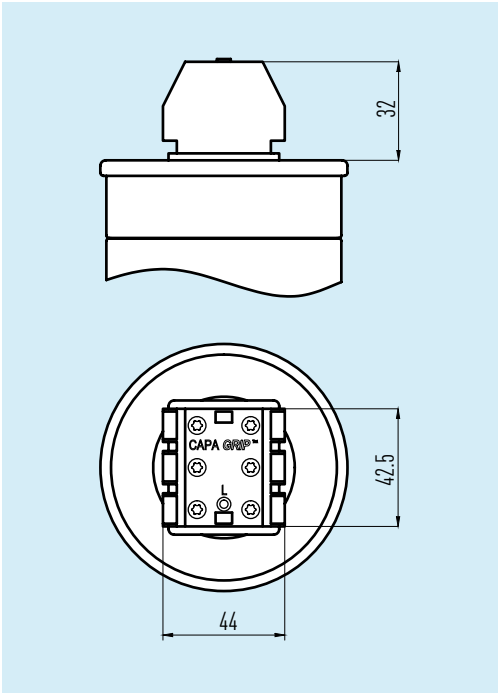

CAPA**GRIP**™ L

Available for diameters 85 ... 136 mm.

Case
extruded aluminium can with base mounting stud M12, hermetically sealed by aluminium lid (folded edge)

Terminal block
Steel clamp with T20 M5 screws in flame retardant plastic body (UL94:V0)

max. cable cross section:	2 × 25 mm² per phase
max. terminal rating:	56 A/phase

discharge resistors: available as separate item (see pgs. 47ff)

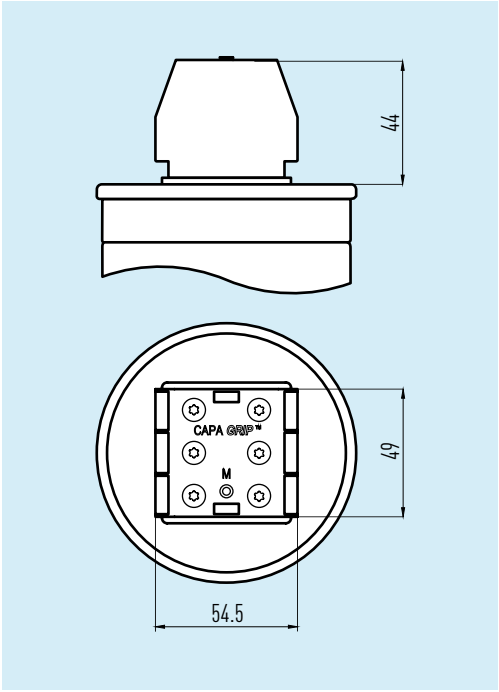

CAPA**GRIP**™ M

Available for diameters 95 ... 136 mm.

Case
extruded aluminium can with base mounting stud M12, hermetically sealed by aluminium lid (folded edge)

Terminal block
Steel clamp with T20 M6 screws in flame retardant plastic body (UL94:V0)

max. cable cross section:	2 × 50 mm² per phase
max. terminal rating:	104 A/phase

discharge resistors: available as separate item (see pgs. 47ff)

MKP(D): THE LOW-COST ALTERNATIVE

D1/D2

D3

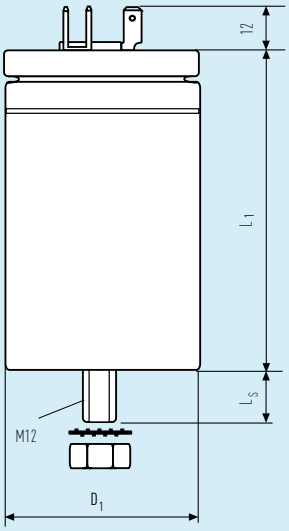

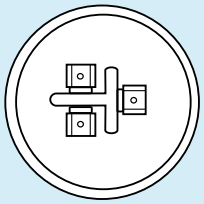

D3
3ph

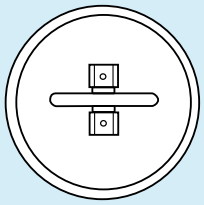

D1
1ph
ø < 60 mm

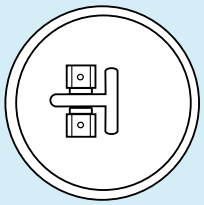

D2
1ph
ø = 65...75 mm

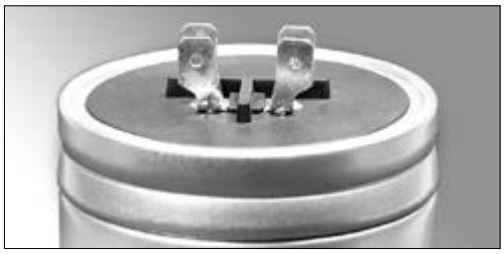

The low-cost alternative for single and three phase capacitors with a rated current of up to 16 A/phase and diameters of 40 to 75 mm. Also available with plastic protective cap and mounted discharge resistors.

Series	**MKP(D) 276**
Protection	IP00
Humidity class	F
Creepage distance	10 mm
Air clearance	8 mm

Available for diameters 40 ... 75 mm.

Case
Extruded aluminium can with base mounting stud (M12)
Hermetically sealed by plastic lid with rubber gasket

Terminals
Dual tab connectors, tinned steel 6.3 × 0.8 mm
max. terminal current: 21 A/phase using both terminal tabs

Discharge resistors available as separate item (see page 48)

DEFINITIONS AND SELECTION CRITERIA

Rated Voltage U_N

Root mean square of the max. permissible value of sinusoidal AC voltage in continuous operation. The rated voltage of the capacitors indicated in the data charts must not be exceeded even in cases of malfunction. Bear in mind that capacitors in detuned equipment are exposed to a higher voltage than that of the rated mains voltage; this is caused by the connection of detuning reactor and capacitor in series. Consequently, capacitors used with reactors must have a voltage rating higher than that of the regular mains voltage (compare U_C on page 57). Unless indicated otherwise, all voltages stated in this catalogue are rms values.

U_N

Maximum RMS Voltage U_{max}

Maximum rms voltage, which the capacitor can be exposed to permanently. This value also considers the maximum reactive power and the resulting power losses of the capacitor.

U_{max}

Test Voltage Between Terminals U_{BB}

Routine test of all capacitors conducted at room temperature, prior to delivery. A further test with 80 % of the test voltage stated in the data sheet may be carried out once at the user's location.

U_{BB}

Voltage test between terminals and case U_{BG}

Routine test of all capacitors between short-circuited terminals and case, conducted at room temperature. May be repeated at the user's location.

U_{BG}

Rated power Q_C

Reactive power resulting from the ratings of capacitance, frequency, and voltage: $Q_C = 2\pi f \cdot C \cdot U_N^2$

Q_C

Maximum RMS Current Rating I_{max}

Maximum rms value of permissible current in continuous operation. The maximum permitted rms current for each particular capacitor is related either to construction features or to the current limits of the terminals. In accordance with IEC 60831 all ELECTRONICON capacitors are rated at least $1.3 \times I_N$ (with I_N being the nominal current of the capacitor at rated voltage and frequency), allowing for the current rise from permissible voltage and capacitance tolerances as well as harmonic distortion. As a rule, our values of maximum permitted continuous current are substantially higher. The exact value for each capacitor can be found in the individual data sheet. Higher rms values can be implemented by adjustments in construction and are available on request.

I_{max}

Continuous currents that exceed the I_{max} values specified in the data charts will lead to a build-up of heat in the capacitor and may cause reduced lifetime or premature failure. Permanent excess current may even result in malfunction of the capacitor's safety mechanisms, i.e. bursting or fire (see page 18).

Care must be taken not to exceed the maximum voltage and current ratings when installing capacitors in close-tuned or detuned equipment (see data sheets for maximum ratings). The thermal monitoring of reactors, or the use of overcurrent protection relays in the capacitor circuit is recommended to protect against overloads.

DEFINITIONS AND SELECTION CRITERIA

Current rating I_N

RMS value of the current at rated voltage and frequency, excluding harmonic distortion, switching transients, and capacitance tolerance.

It can be calculated by the formula $I = \frac{Q_C}{U_N} = 2\pi f \cdot C \cdot U_N$ and is not stated in the data charts.

Pulse current strength I_S

Depending on construction and voltage rating, the design of our capacitors permits short term inrush currents of 100...400 × I_N and – in accordance with IEC 60831 – up to 5000 switching operations per annum as standard. However, when switching capacitors in automatic capacitor banks without detuning reactors, higher loads are very often the case. This may generate negative effects on the operational life, especially with capacitors which are frequently connected and disconnected (e.g. primary stages in automatic capacitor banks). Moreover, even detuned capacitors may experience switching currents exceeding the permissible maximum current of the reactor and causing consequential damage to both capacitor and reactor.

We strongly recommend the use of special capacitor contactors with inrush limiting resistors, or other adequate devices for limitation of the peak inrush currents.

Temperature category

The average useful life of a capacitor depends very much on the ambient temperatures it is operated at. The permissible operating temperatures are defined by the temperature class stated on the label which contains the lower limit temperature (-40°C for design D, -50°C for all CAPAGRIP™ power capacitors) and a letter, which describes the values of the upper limit temperatures. Chart 6 is based on IEC 60831 and details the maximum permitted ambient temperatures for capacitors in each temperature category.

temperature category	ambient temperature limits		
	maximum	max. average 24 hrs	max. average 365 days
B	45°C	35°C	25°C
C	50°C	40°C	30°C
D	55°C	45°C	35°C
60	60°C	50°C	40°C
65	65°C	55°C	45°C
70	70°C	60°C	50°C

chart 6

Lifetime Statements

Even though all our lifetime statements are based on many years of empirical data, testing and field statistics, they will always remain just a general prognosis based on data of the past and accelerated laboratory tests which cannot reflect all aspects of modern operating conditions. The real "lifetime" of our capacitors depends on a multitude of influencing factors, such as ambient temperatures, operating voltages, frequency of overvoltages, frequency of switching, system faults a.o. The lifetime estimations given in our data sheets are therefore linked with specific operating conditions (voltage and temperature).

It has also to be noted that any lifetime statement considers a certain percentage of permitted failures within a given lot, reflecting the fact that any component has a FIT rate (failures in time). Under rated operating conditions, our capacitors can be expected to have a FIT rate of no more than 300 (corresponding to a maximum failure rate of 3 %) during their initial 100,000 hours of operation..

Please consult our sales teams if in doubt about the specific implications of your intended operating conditions on lifetime and reliability of our capacitors.

DATA CHARTS

General Technical Data

rated voltages		230 ... 800 V, 50 Hz
permitted overvoltages and test voltages		in accordance with IEC EN 60831-1/2 (see data charts for details)
tolerance of capacitance		– 5 ... + 10 %, ± 5 % on request
maximum permissible current		at least 1.3 I_N, see data charts for details
max. inrush current	MKPg 275, MKP(D) 276	300 x I_N
	MKP-UHD 280	400 x I_N
dissipation losses (capacitor)		approx. 0.25 ... 0.40 W/kvar
internal connection		delta
safety device		BAM™ (overpressure break action mechanism)
dielectric material		low-loss polypropylene, dry
impregnant (filling material)	MKPg 275	inert insulation gas (N_2)
	MKP(D) 276, MKP-UHD 280	resin, based on vegetable oil
mounting position	MKPg 275	any position
	MKP(D) 276, MKP-UHD 280	vertical position recommended
max. relative humidity		95 % (climatic class C; MKP(D) 276 only: climatic class F)
operating temperatures		see data charts for ambient temperature class
storage temperature		-50 ... +85°C
max. altitude abv.s.l.		4000 m a.s.l.
statistical life expectancy		100,000 ... 200,000 h depending on type range and operating temperatures (see charts for details)
applied standards		IEC EN 60831, VDE 0560-46/47 UL Standard No. 810, CSA C22.2 No. 190, GOST 1282-88, IS 13340/13341
approval marks		**all capacitors in this catalogue:** UL/C-UL recognized component, 10,000AFC internally protected

All capacitors listed in this catalogue comply with the relevant regulations and guidelines of the European Union: 2014/35/EU (Low-Voltage Directive).
This is proven by the technical documentation and compliance with the following standard: IEC/DIN EN 60831-1/2:2014

MKPg™
275.*** 3PH GAS-FILLED
400 ... 440 V 50Hz

for latest edition and updates
check www.powercapacitors.info

BAM IP20 Torx T20 CAPAGRIP C US 10000 AFC

Three-phase power capacitors, dry self-healing dielectric, gas-filled (N_2)
For detuned and non-detuned PFC equipment in mains with standard operating conditions

U_N	$\Theta_{ambient}$	statistical life
400...415 V	-50/D	>130,000 h
440 V	-50/D	>100,000 h

Permitted overvoltages

8h/d	485 V	1min (200×)	575 V
30min/d	510 V	max. peak voltage	1350 V ac
5min (200×)	530 V		

CAPA***GRIP***™ K and II (L4) including discharge resistors. For L and M see resistor modules on pages 48f.

Q_C 440 V (kvar)	Q_C 415 V (kvar)	Q_C 400 V (kvar)	C_N (µF)	I_{max} (A)	$D_1 \times L_1$ (mm)	m (kg)	CAPA *GRIP*	order no.	packg.lot / box
5	–	–	3 × 28	3 × 12	60 × 164	0.4	K	275.525-402800	10 / FB8
6	5.4	5	3 × 33	3 × 16	65 × 164	0.5	K	275.535-403300	5 / FB8
8.4	7.5	–	3 × 46	3 × 20	75 × 164	0.7	K	275.545-404600	5 / FB8
10	–	8.3	3 × 57	3 × 25	65 × 245	1	K	275.538-405700	5 / FB12
11.3	10	–	3 × 62	3 × 23	65 × 245	1	K	275.538-406200	5 / FB12
15	13.3	12.5	3 × 82	3 × 31	75 × 245	1.1	K	275.548-408200	5 / FB12
18.2	–	15	3 × 100	3 × 36	85 × 245	1.5	L4	275.258-410000	5 / FB12
20	–	16.6	3 × 110	3 × 39	85 × 245	1.5	L4	275.258-411000	5 / FB12
22.4	20	–	3 × 123	3 × 39	85 × 280	1.5	L4	275.259-412300	5 / FB10
25	–	20	3 × 137	3 × 47	85 × 280	1.5	L4	275.259-413700	5 / FB10
28.2	25	–	3 × 154	3 × 56	100 × 245	1.8	L4	275.278-415400	3 / FB12
30	–	25	3 × 166	3 × 56	95 × 280	2	L4	275.269-416600	3 / FB10
50	–	–	3 × 274	3 × 86	136 × 295	4.1	M	275.39B-527400	2 / FB15
–	50	–	3 × 308	3 × 90	136 × 295	4.1	M	275.39B-530800	2 / FB15
–	–	50	3 × 331	3 × 94	136 × 295	4.1	M	275.39B-533300	2 / FB15

Other sizes and ratings are available on request. Single phase capacitors are available on request in same dimensions and design.
Mind Mounting and Operating Instructions on pages 34ff!

MKPg™
275.*** 3PH GAS-FILLED
400 ... 480 V 50Hz

BAM IP20 Torx T20 CAPAGRIP C US 10000 AFC

Three-phase power capacitors, dry self-healing dielectric, gas-filled (N_2)
For detuned and non-detuned PFC equipment in mains with severe operating conditions or substantial voltage fluctuations.

U_N	$\Theta_{ambient}$	statistical life
400...440V	-50/60	>150,000 h
480V	-50/D (*-50/C)	>100,000 h

Permitted overvoltages

8h/d	485 V	1min (200×)	575 V
30min/d	510 V	max. peak voltage	1350 V ac
5min (200×)	530 V		

CAPA***GRIP***™ K and II (L4) including discharge resistors. For L and M see resistor modules on pages 48f.

Q_C 480V (kvar)	Q_C 440V (kvar)	Q_C 415V (kvar)	Q_C 400V (kvar)	C_N (µF)	I_{max} (A)	$D_1 \times L_1$ (mm)	m (kg)	CAPA *GRIP*	order no.	packg.lot / box
6.1	5	4.6	4.2	3 × 28	3 × 12	60 × 196	0.7	K	275.523-502800	10 / FB8
7.5	6.25	–	5	3 × 33	3 × 17	75 × 164	1	K	275.545-503300	5 / FB8
8.7	7.5	–	6.25	3 × 40	3 × 18	75 × 164	0.7	K	275.545-504000	5 / FB8
10	8.4	7.4	7	3 × 46	3 × 18	65 × 230	0.8	K	275.536-504600	5 / FB12
12.5	10	–	–	3 × 58	3 × 23	75 × 230	1	K	275.546-505800	5 / FB12
13.5	–	10	–	3 × 62	3 × 27	75 × 230	1	K	275.546-506200	5 / FB12
15	12.5	–	10	3 × 68	3 × 27	75 × 245	1.1	K	275.548-506800	5 / FB12
16.7	14.1	12.5	–	3 × 77	3 × 33	85 × 230	1.3	L4	275.256-507700	5 / FB12
18	15.2	13.4	12.4	3 × 83	3 × 33	85 × 230	1.5	L4	275.256-508300	5 / FB12
24.1	20	18.0	16.8	3 × 111	3 × 49	95 × 230	1.5	L4	275.266-511100	3 / FB12
24.1	20	–	–	3 × 111	3 × 49	95 × 230	1.5	L	275.166-511100	3 / FB12
25	21	18.6	17.4	3 × 115	3 × 50	95 × 245	1.7	L4	275.268-511500	3 / FB12
26.7	–	20	–	3 × 123	3 × 46	100 × 230	1.7	L4	275.276-512300	3 / FB12
30*	25	–	20	3 × 137	3 × 54	100 × 245	1.8	L4	275.278-513700	3 / FB12
30*	25	–	20	3 × 137	3 × 54	100 × 245	1.8	L	275.178-513700	3 / FB12
33.3*	28.2	25	–	3 × 154	3 × 56	116 × 230	2.3	L	275.186-515400	3 / FB12
33.3*	28.2	25	–	3 × 154	3 × 56	100 × 280	2.2	L4	275.279-515400	3 / FB12
36*	30	–	25	3 × 166	3 × 56	116 × 230	2.3	L	275.186-516600	3 / FB12
36*	30	–	25	3 × 166	3 × 56	100 × 280	2	L4	275.279-516600	3 / FB10
–	–	–	30	3 × 199	3 × 56	116 × 280	2.6	L4	275.289-519900	3 / FB10
–	36	–	30	3 × 199	3 × 62	116 × 280	2.6	M	275.389-519900	3 / FB10
–	40	–	33.3	3 × 221	3 × 75	116 × 280	2.6	M	275.389-522100	3 / FB10
–	48	–	40	3 × 265	3 × 78	136 × 280	3.7	M	275.399-526500	2 / FB10

Other sizes and ratings are available on request. Single phase capacitors are available on request in same dimensions and design.
Mind Mounting and Operating Instructions on pages 34ff!

MKPg™
275.*** 3PH GAS-FILLED
400 ... 525 V 50Hz

Torx T20 CAPAGRIP C US 10000 AFC

Three-phase power capacitors, dry self-healing dielectric, gas-filled (N_2)
For detuned and non-detuned PFC equipment in mains with severe operating conditions or substantial voltage fluctuations.

U_N	$\Theta_{ambient}$	statistical life
400...440 V	-50/60 (*-50/D)	>150,000 h
480 V	-50/D	>150,000 h

Permitted overvoltages

8h/d	530 V	1min (200×)	625 V
30min/d	555 V	max. peak voltage	1450 V ac
5min (200×)	580 V		

For resistor modules see pages 48f.

Q_C 480V (kvar)	Q_C 440V (kvar)	Q_C 415V (kvar)	Q_C 400V (kvar)	C_N (µF)	I_{max} (A)	$D_1 \times L_1$ (mm)	m (kg)	CAPA *GRIP*	order no.	packg.lot / box
31.1	26	23.2	21.6	3 × 143	3 × 56	116 × 245	2.5	L4	275.288-614300	3/FB12
33.4	28.2	25	23.2	3 × 154	3 × 56	116 × 245	2.5	L4	275.288-615400	3/FB12
36	30	27	25	3 × 166	3 × 56	136 × 230	3.0	L	275.196-616601	2/FB12
36	30	27	25	3 × 166	3 × 56	116 × 280	2.6	L4	275.289-616600	3/FB10
40	33.8	30	27.8	3 × 185	3 × 56	116 × 280	2.6	L4	275.289-618500	3/FB10
50	41.8*	37.2	34.6	3 × 229	3 × 80	136 × 295	4.1	M	275.39B-622900	2/FB15

Other sizes and ratings are available on request. Single phase capacitors are available on request in same dimensions and design.
Mind Mounting and Operating Instructions on pages 34ff!

Three-phase power capacitors, dry self-healing dielectric, gas-filled (N_2)
For detuned and non-detuned PFC equipment in special industrial mains and installations with tough operating conditions

All items in this range are also rated for operation at 480V 60Hz

U_N	$\Theta_{ambient}$	statistical life
525V	-50/60	>150,000 h

Permitted overvoltages

8h/d:	580 V	1min (200×)	680 V
30min/d:	600 V	max. peak voltage	1600 V ac
5min (200×):	630 V		

CAPA***GRIP***™ K including discharge resistors. For L see resistor modules on pages 48f.

U_N 525V (kvar)	C_N (µF)	I_{max} (A)	$D_1 \times L_1$ (mm)	m (kg)	CAPA *GRIP*	order no.	packg.lot / box
10	3 × 38	3 × 20	85 × 230	1.3	L	275.156-803800	5/FB12
25	3 × 96	3 × 45	116 × 280	2.6	L	275.189-809600	3/FB10

Other sizes and ratings are available on request. Single phase capacitors are available on request in same dimensions and design.
Mind Mounting and Operating Instructions on pages 34ff!

MKPg™
275.*** 3PH GAS-FILLED
400 ... 525 V 50Hz

BAM IP20 Torx T20 CAPAGRIP C US 10000 AFC

Three-phase power capacitors, dry self-healing dielectric, gas-filled (N_2)
For detuned and non-detuned PFC equipment in mains with severe operating conditions or substantial voltage fluctuations.

All items in this range are also rated for operation at 480V 60Hz

U_N	$\Theta_{ambient}$	statistical life
400...415 V	-50/65	>150,000 h
440 V	-50/60	>150,000 h
480 V	-50/D	>150,000 h
525 V	-50/D	>100,000 h

Permitted overvoltages

8h/d	580 V	1min (200×)	680 V
30min/d	600 V	max. peak voltage	1600 V ac
5min (200×)	630 V		

CAPA***GRIP***™ K and II (L4) including discharge resistors. For L and M see resistor modules on pages 48f.

Q_N 525V (kvar)	Q_N 480V (kvar)	Q_C 440V (kvar)	Q_C 415V (kvar)	Q_C 400V (kvar)	C_N (µF)	I_{max} (A)	$D_1 \times L_1$ (mm)	m (kg)	CAPA *GRIP*	order no.	packg.lot / box
2.8	2.5	2	1.8	1.6	3 × 11	3 × 5	60 × 164	0.4	K	275.525-801100	10 / FB8
3.6	3	2.5	—	—	3 × 14	3 × 8	60 × 164	0.4	K	275.525-701400	10 / FB8
4.4	3.7	3	—	2.5	3 × 17	3 × 6	60 × 164	0.4	K	275.525-601700	10 / FB8
5	4.1	3.4	3	2.8	3 × 19	3 × 9	65 × 164	0.5	K	275.535-601900	5 / FB8
7.5	6.3	5.2	4.6	4.4	3 × 29	3 × 12	75 × 164	0.7	K	275.545-602900	5 / FB8
10	8.3	7	6.2	5.8	3 × 38	3 × 20	75 × 230	1.0	K	275.546-703800	5 / FB12
12.5	10	8.8	7.5	7.2	3 × 48	3 × 22	75 × 230	1.0	K	275.546-604800	5 / FB12
15	12.5	10.6	9.4	8.8	3 × 58	3 × 30	75 × 245	1.1	K	275.548-605800	5 / FB12
16.6	14.0	11.7	10.4	9.7	3 × 64	3 × 30	85 × 230	1.3	L	275.156-606400	5 / FB12
17.6	15	12.5	11	10.0	3 × 68	3 × 27	85 × 230	1.3	L4	275.256-606800	5 / FB12
18.6	15.6	13.2	11.6	10.8	3 × 72	3 × 29	85 × 245	1.4	L4	275.258-607200	5 / FB12
20	16.7	14	12.5	11.6	3 × 77	3 × 33	95 × 230	1.5	L4	275.266-607700	5 / FB12
21.6	18	15	13.4	12.5	3 × 83	3 × 36	95 × 230	1.5	L4	275.266-608300	3 / FB12
25	20.8	17.4	15.6	14.4	3 × 96	3 × 45	95 × 245	1.7	L4	275.268-609600	3 / FB12
30	25	21	18.6	17.4	3 × 115	3 × 54	116 × 230	2.3	L	275.186-611500	3 / FB12
30	25	21	18.6	17.4	3 × 115	3 × 43	95 × 280	2.3	L4	275.269-611500	3 / FB10
32	26.7	22.4	20	18.6	3 × 123	3 × 48	116 × 230	2.3	L	275.186-612300	3 / FB12
32	26.7	22.4	20	18.6	3 × 123	3 × 46	95 × 280	2.3	L4	275.269-612300	3 / FB10
33.3	28.0	23.4	20.8	19.3	3 × 128	3 × 50	100 × 280	2.4	L	275.179-612800	3 / FB10
37.2	31.1	26	23.2	21.6	3 × 143	3 × 56	116 × 280	2.6	L4	275.289-714301	3 / FB10
40	33.4	28.2	25	23.2	3 × 154	3 × 72	136 × 230	3.7	M	275.396-715401	2 / FB12
43	36	30.2	27	25	3 × 166	3 × 76	136 × 280	4.0	M	275.399-716600	2 / FB10
50	41.7	35	31.2	29	3 × 192	3 × 80	136 × 295	4.1	M	275.39B-719200	2 / FB15

Other sizes and ratings are available on request. Single phase capacitors are available on request in same dimensions and design.
Mind Mounting and Operating Instructions on pages 34ff!

MKPg™
275.*** 3PH GAS-FILLED
690 ... 800 V 50Hz

for latest edition and updates
check www.powercapacitors.info

Torx T20 CAPAGRIP C US 10000 AFC

Three-phase power capacitors, dry self-healing dielectric, gas-filled (N_2)
For detuned and non-detuned PFC equipment in 690V mains with normal operating conditions or substantial voltage fluctuations.

U_N	$\Theta_{ambient}$	statistical life
690 V	-50/60 (*-50/D)	>150,000 h
760 V	-50/D	>150,000 h

Permitted overvoltages

8h/d	840 V	1min (200×)	990 V
30min/d	875 V	max. peak voltage	2300 V ac
5min (200×)	915 V		

For resistor modules see pages 48f.

Q_C 690V (kvar)	Q_C 760V (kvar)	C_N (µF)	I_{max} (A)	$D_1 \times L_1$ (mm)	m (kg)	CAPA *GRIP*	order no.	packg.lot / box
12.5	15	3 × 27.6	3 × 17	116 × 164	1.6	L	275.185-402800	3 / FB8
27.8*	34	3 × 62	3 × 36	116 × 280	2.6	L	275.189-406200	3 / FB10
33*	40	3 × 74	3 × 43	116 × 280	2.6	L	275.189-407400	3 / FB10
50*	–	3 × 111	3 × 55	136 × 295	4.1	M	275.39B-411100	2 / FB15

Other sizes and ratings are available on request. Single phase capacitors are available on request in same dimensions and design.
Mind Mounting and Operating Instructions on pages 34ff!

U_N	$\Theta_{ambient}$	statistical life
690 V	-50/60	>150,000 h
800 V	-50/D	>150,000 h

Permitted overvoltages

8h/d	880 V	1min (200×)	1040 V
30min/d	920 V	max. peak voltage	2400 V ac
5min (200×)	960 V		

For resistor modules see pages 48f.

Q_N 800V (kvar)	Q_C 690V (kvar)	C_N (µF)	I_{max} (A)	$D_1 \times L_1$ (mm)	m (kg)	CAPA *GRIP*	order no.	packg.lot / box
16.7	12.5	3 × 27.7	3 × 19	95 × 230	1.5	L	275.166-502800	3 / FB12
30	22	3 × 49	3 × 32	116 × 280	2.6	L	275.189-504900	3 / FB10

Other sizes and ratings are available on request. Single phase capacitors are available on request in same dimensions and design.
Mind Mounting and Operating Instructions on pages 34ff!

MKP UHD™
280.*** 3PH OIL-FILLED
400 ... 580V 50Hz

BIO BAM IP20 CAPAGRIP C US 10000 AFC

Three-phase power capacitors, dry self-healing dielectric, oil-filled
For ultra heavy duty filters and detuned or non-detuned PFC equipment in mains with extreme operating conditions

All items in this range are also rated for operation at 480V 60Hz

MKP UHD™ contain three delta-switched capacitor elements of short height and large diameter. The optimized combination of winding length, film size, and winding geometry minimizes inherent power losses and allows to achieve highest ratings of surge and rms currents as well as an overvoltage strength which before would have been known only of impregnated paper capacitors. By using selected low-loss, self-healing polypropylene films and sophisticated manufacturing techniques such as high-vacuum drying and special coating patterns, MKP UHD™ combine long service life with constant capacitance and outstanding switching stability.

U_N	$\Theta_{ambient}$	statistical life
400...440 V	-50/70	>150,000 h
480 V	-50/65	>150,000 h
525 V	-50/60	>150,000 h
580 V	-50/D	>150,000 h

Permitted overvoltages

8h/d	640V	1min (200×)	755V
30min/d	670V	max. peak voltage	1740V ac
5min (200×)	695V		

For resistor modules see pages 48f

$Q_{C\,580V}$ (kvar)	$Q_{C\,440V}$ (kvar)	$Q_{C\,400V}$ (kvar)	C_N (µF)	I_{max} (A)	$\hat{I}_{max}$ (kA)	$D_1 \times H$ (mm)	weight (kg)	CAPA *GRIP*	part no.	packg.lot / box
21.5	12.5	10	3 × 68	3 × 41	3 × 6.6	95 × 280	2.3	L	280.169-306801	3/FB10
26	15	12.5	3 × 82	3 × 49	3 × 8	100 × 280	2.5	M	280.379-308201	3/FB10
34.6	20	16.6	3 × 110	3 × 65	3 × 10.5	116 × 280	2.9	M	280.389-311001	3/FB10
43	25	20	3 × 137	3 × 82	3 × 13.1	136 × 280	3.9	M	280.399-313701	2/FB10

Mind Mounting and Operating Instructions on pages 34ff!

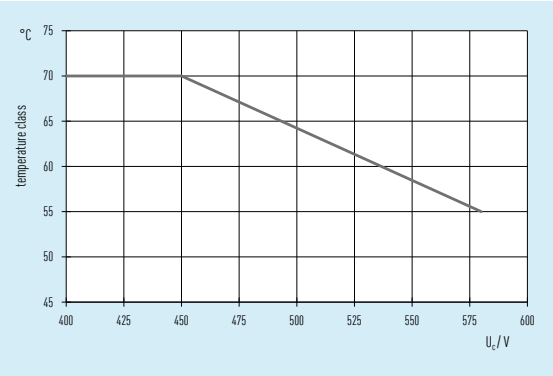

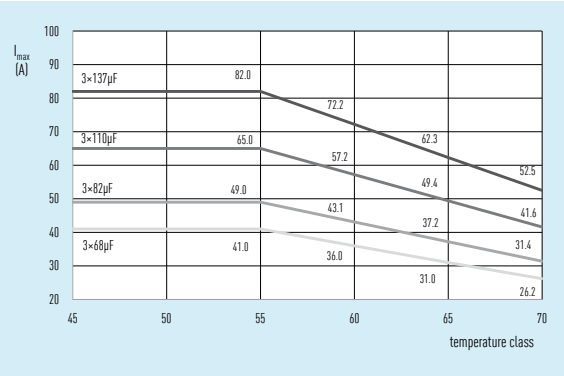

MKP(D)

276.*** 3PH OIL-FILLED

400 ... 525 V 50Hz

for latest edition and updates
check www.powercapacitors.info

D3

Three-phase power capacitors, dry self-healing dielectric, oil-filled
For detuned and non-detuned PFC equipment in mains with severe operating conditions or substantial voltage fluctuations.

U_N	$\Theta_{ambient}$	statistical life
400...440 V	-40/65	>150,000 h
480 V	-40/D	>150,000 h

Permitted overvoltages

8h/d	530 V	1min (200×)	625 V
30min/d	555 V	max. peak voltage	1450 V ac
5min (200×)	580 V		

For resistor modules see page 48.

Q_C 480V (kvar)	Q_C 440V (kvar)	Q_C 415V (kvar)	Q_C 400V (kvar)	C_N (µF)	I_{max} (A)	$D_1 \times L_1$ (mm)	m (kg)	terminal	order no.	packg.lot / box
3.7	3.12	2.8	2.5	3 × 17	3 × 6.6	50 × 151	0.3	D3	276.036-501700	21 / FB0
6	5	4.5	4.17	3 × 28	3 × 11	65 × 155	0.6	D3	276.066-502800	10 / FB7
6.7	5.6	5.1	4.7	3 × 31	3 × 14	65 × 155	0.6	D3	276.066-503100	10 / FB7
–	6.25	5.5	5	3 × 34	3 × 16	65 × 155	0.6	D3	276.066-503400	10 / FB7
9	7.5	6.7	6.25	3 × 42	3 × 14	75 × 155	0.7	D3	276.076-504200	8 / FB7
–	9	8.1	7.5	3 × 50	3 × 17	75 × 155	0.7	D3	276.076-405000	8 / FB7
15	12.5	11	10	3 × 68	3 × 20	75 × 215	1	D3	276.078-506800	8 / FB8

Other sizes and ratings are available on request. Single phase capacitors are available on request in same dimensions and design.
Mind Mounting and Operating Instructions on pages 34ff!

U_N	$\Theta_{ambient}$	statistical life
400...440 V	-40/65	>150,000 h
480...525 V	-40/60	>150,000 h

Permitted overvoltages

8h/d	580 V	1min (200×)	680 V
30min/d	600 V	max. peak voltage	1600 V ac
5min (200×)	630 V		

For resistor modules see page 48.

Q_C 525V (kvar)	Q_C 480V (kvar)	Q_C 440V (kvar)	Q_C 415V (kvar)	Q_C 400V (kvar)	C_N (µF)	I_{max} (A)	$D_1 \times L_1$ (mm)	m (kg)	terminal	order no.	packg.lot / box
5	4.17	3.5	3	2.9	3 × 19.2	3 × 10	65 × 155	0.6	D3	276.066-701900	10 / FB7
10	8.5	7	6.25	5.9	3 × 39	3 × 19	75 × 215	1	D3	276.078-703900	8 / FB8

Other sizes and ratings are available on request. Single phase capacitors are available on request in same dimensions and design.
Mind Mounting and Operating Instructions on pages 34ff!

MKP-1
276.*** 1PH OIL-FILLED
400 ... 525 V 50Hz

BIO BAM IP00 D1/D2 C US 10000 AFC

Single-phase power capacitors, dry self-healing dielectric, oil-filled
For detuned and non-detuned PFC equipment in mains with standard operating conditions

U_N	$\Theta_{ambient}$	statistical life
400...440V	-40/60	>150,000 h
480V	-40/D	>150,000 h

Permitted overvoltages

8h/d	530 V	1min (200×)	625 V
30min/d	555 V	max. peak voltage	1450 V ac
5min (200×)	580 V		

For resistor modules see page 48.

Q_C 480V (kvar)	Q_C 440V (kvar)	Q_C 415V (kvar)	Q_C 400V (kvar)	C_N (µF)	I_{max} (A)	$D_1 \times L_1$ (mm)	m (kg)	terminal	order no.	packg.lot / box
4.1	3.3	3.1	2.9	57	11.1	50 x 148	0.3	D1	276.036-505710	21 / FB0
4.5	3.8	3.4	3.1	62	12.2	50 x 148	0.3	D1	276.036-506210	21 / FB0
4.8	4	3.6	3.3	66	13	50 x 148	0.3	D1	276.036-506610	21 / FB0
5.6	4.7	4.2	3.9	77	15.2	55 x 148	0.4	D1	276.046-507710	18 / FB0
6	5	4.5	4.2	83	16.3	60 x 148	0.5	D1	276.056-508310	18 / FB0
–	–	7.2	6.7	133	22	65 x 188	0.6	D2	276.067-513310	10 / FB8

Other sizes and ratings are available on request.
Mind Mounting and Operating Instructions pages 34ff!

U_N	$\Theta_{ambient}$	statistical life
400...525V	-40/60	>150,000 h

Permitted overvoltages

8h/d	580 V	1min (200×)	680 V
30min/d	600 V	max. peak voltage	1600 V ac
5min (200×)	630 V		

For resistor modules see page 48.

Q_C 525V (kvar)	Q_C 480V (kvar)	Q_C 440V (kvar)	Q_C 415V (kvar)	Q_C 400V (kvar)	C_N (µF)	I_{max} (A)	$D_1 \times L_1$ (mm)	m (kg)	CAPA *GRIP*	order no.	packg.lot / box
2.9	2.4	2	1.8	1.7	33	7.2	50 × 148	0.3	D1	276.036-703310	21 / FB0
4.17	3.5	3	2.6	2.4	48.2	10.3	55 × 148	0.4	D1	276.046-704810	18 / FB0
5.8	4.8	4	3.6	3.3	66	14.3	65 × 148	0.6	D2	276.066-706610	10 / FB0

Other sizes and ratings are available on request.
Mind Mounting and Operating Instructions pages 34ff!

MOUNTING INSTRUCTIONS

Safe operation of the capacitors can be expected only if all electrical and thermal specifications as stated on the label, in the data sheets or catalogues and the following instructions are strictly observed. ELECTRONICON does not accept responsibility for whatever damage may arise out of a non-observance.

Mounting Position

Oil-filled MKP(D) 276 and MKP UHD capacitors shall be installed upright with terminals facing upwards. Gas-filled MKPg 275 capacitors can be mounted in any position without restrictions, however, a position with terminals pointing downwards should be avoided.

Location/Cooling

The useful life of a capacitor may be reduced dramatically if exposed to excessive heat. Typically, an increase in the ambient temperature by 7°C will halve the expected life of the capacitor. The permitted temperature category of the capacitor is stated on the label. If extenuating circumstances give cause for doubt, special tests should be conducted by the user to ensure that the permitted maximum ambient temperature of the capacitor is not exceeded. It should be noted that the internal heat balance of large capacitors is only reached after a couple of hours.

To avoid overheating the capacitors must be allowed to cool unhindered and should be shielded from external heat sources. Do not place the capacitors directly above or next to heat sources such as detuning or tuning reactors, bus bars, etc. and make sure the connecting cables do not import additional heat via the terminals. We recommend forced ventilation for all applications with detuning reactors. Give at least 15 ... 20 mm clearance between the capacitors for natural convection or forced ventilation.

Mounting

All cylindrical capacitors are fitted with a "break-action" safety mechanism (BAM™, see page 18) which may cause the case to expand, especially at the crimp and at the lid.

- The folded edge of the lid must not be retained by clamps.
- A clearance of at least 35mm above the terminations shall be accommodated.
- Required clearances according to applicable voltage category must be maintained even after activation of the BAM™ and prolongation of the can.

The hermetic sealing of the capacitors is crucial for a long operating life and for the correct functioning of the beak action mechanism. Please pay special attention not to damage the following critical sealing points:

- the folded edge of the lid
- the connection between screw terminal and lid (designs K, L, L4, M)
- the rubber seal and the soldering at the base of the tab connectors (design D)

The folded edge and the connection terminals must not be hit with heavy or sharp objects or tools (e.g. hammer, screw driver).

Fixation

All cylindrical capacitors can be fixed sufficiently using the mounting stud at the base of the can. Make sure to insert the washer which is delivered along with the mounting nut.

mounting stud	permitted max. torque
M8	5 Nm
M12	15 Nm

chart 7

Vibration stress according to DIN IEC 60068-2-6
Please consult us for details of permitted vibration stress in your application.
Note that capacitors fitted with the EL-Dr discharge reactor must not be exposed to any vibration stress at all.

Connection
Fuses and cross section of the leads should be sized for at least 1.5 times of the rated capacitor current (I_N). Please ensure that the permitted maximum rms current according to data chart (I_{max}) is not exceeded. Do not exceed the permitted nominal current values per contact as specified in chart 8 even when coupling capacitors in parallel.

The capacitors shall only be connected with flexible cables or elastic copper bands to ensure unrestricted functioning of the expansion mechanism (BAM™).
Stranded cables should be fitted with ferrules when connected to the CAPAGRIP terminals. See chart 8 for minimum cable size if used **without** ferrules. Make sure to use cables with fine or medium strands only.

The solder joints on the capacitor lids guarantee the hermetical sealing of the capacitors and must not be exposed to excessive heat. It is not recommended to solder cables to type D terminals. Instead, always use appropriate tab connectors (6.3 mm) for connection.
The CAPAGRIP™ terminals (design K, L, L4, M) and the tab connectors (design D) must not be bent, twisted or moved in any other way.

Selection of cables
Cables used for the connection of power capacitors must not contribute to the power losses of the capacitor. It may therefore be appropriate to select cable sizes in excess of the minimum permitted cross sections usually specified by cable manufacturers.

Chart 8 is based on DIN VDE 0100-430 and IEC 60439-1 and related to the operation of three or four bundled copper cables at an average ambient temperature of 40°C. Mind that national rules or the standards of your application may require different ratings.

Chart 8 outlines the minimum requirements towards the connection of capacitors. We recommend dimensioning the cables for at least 1.5 x I_N where possible, and using one grade larger cable ratings if expecting higher ambient temperatures and/or substantial content of harmonics.

max. nominal capacitor current (A/phase)	e.g. Q_C at 400V 50Hz (kvar)	recommended cable section (mm^2/phase)	max. recommended HRC fuse* (A)
6.0	2.5	1.5	25
12.3	5...7.5	2.5	32
16.2	8.3 ... 10	4	35
20.8	12.5...15	6	40
28.5	16.7...20	10	63
37.7	25	16	80
50.0	30...33.3	25	125
60.8	40	35	125
76.2	50	50 / 35**	160

* The recommended HRC fuses are rated for cable protection only.
** Cables shall not be bundled.

chart 8

MOUNTING INSTRUCTIONS

Termination Torques
Do not exceed the permitted torque of the terminal screws (design K, L/L4, M) and the mounting studs. The test values specified by IEC 61068 must be guaranteed as a minimum value.
All CAPAGRIP™ terminals are equipped with Torx screws (T20). Use of improper screw-drivers may damage the screws and impair reliable fixation.

Terminal design	Minimum size of inserted flat conductor W x H (mm)	Cable size with ferrule or plug (mm^2)	Cable size if without ferrule (mm^2)	Max. nominal current (A)	Recommended torque (Nm)
D	n.a.	1.5 ... 6	n.a.	16/plug	n.a.
K	4 ... 4.8 x 1.2	2.5 ... 10	10	30	1.8 ... 2.5
L, L4	5.5 ... 6.8 x 1.2	10 ... 25	16 ... 25	43	2.5 ... 3.0
M	8 ... 9.8 x 1.2	16 ... 35	35 ... 50	80	4.0 ... 5.0

chart 9

Discharge
Standard IEC 60831 requires a safety discharge to ≤ 75 V within 3 minutes in order to protect maintenance personnel from accidental injury by residual voltage.

Capacitors must be discharged and short-circuited before working on the terminals.

In order to minimize the switching strain and to avoid high energizing currents by connection in phase opposition, capacitors shall be discharged to ≤10 % of the rated voltage prior to being re-connected if switched by mechanical devices (magnetic contactors). Note that in automatic capacitor banks, very often shorter discharge cycles may be required (e.g. < 50 V within 60 seconds).

Use rapid discharge reactors or switchable discharge resistors for very short discharge cycles (see chapter "Switching and Discharging Capacitors", pgs. 38ff).

Discharge Modules
For capacitors in **CAPAGRIP L/M**, separate discharge modules in finger-proof housing (IP20) are available for the discharge of single units or groups of paralleled capacitors. For **MKP(D)** capacitors, similar discharge sets are available (IP00). The correct size of the module to be applied can be taken from the selection matrix on pg. 48f.

The discharge resistors may become very hot (up to 200°C) during continuous operation!
For CAPAGRIP L/M only: Remove the lid of the discharge module if applying protective caps to the capacitors!

Capacitors in **CAPAGRIP K and CAPAGRIP II (L4)** are equipped with internal discharge resistors for a discharge within no more than 60 seconds from their highest rated voltage to less than 50 V.

Earthing
Capacitors with a metal case must be earthed at the mounting stud or by means of a separate metal strap or clamp.

Environment

All capacitors are made with lead-free solder tin and comply with the ROHS and REACH regulations. Our capacitors do not contain PCB, solvents, or any other toxic or banned materials. The impregnants and filling materials of MKP(D) and MKP-UHD contain vegetable oil or polyurethane mixtures. The gas-filled MKPg™ capacitors contain only neutral, ecologically sound insulation gasses. Further details on the filling materials can be provided on request.

The capacitors do not contain hazardous substances acc. to European Directives 2003/53/EC and Council Directive 76/769/EEC). They are not classified as **"dangerous goods"** according to transit rules. The capacitors do not have to be marked under the regulations for Hazardous Goods. They are rated WGK 0 (water risk **category 0 "no general threat to water"**).

No danger for health if applied properly. In case of skin contact with filling liquids, clean with water and soap.

Disposal

Capacitors are components of electrical devices. They are NOT equipment or devices by themselves, and not subject to the Waste Electrical and Electronic Equipment Directive (WEEE). We recommend disposing of the capacitors through professional recycling centers for electric/electronic waste.

The capacitors can be disposed of as follows:

- Disposal acc. to European waste catalogue (EWC) No. 16 02 16 ("Components removed from discarded equipment other than those mentioned in 16 02 15").
- Liquid filling materials which may have emerged from the capacitor shall be absorbed by proper granules and disposed of in accordance with EWC No. 08 04 10 ("waste adhesives and sealants other than those mentioned in 08 04 09").

Caution: When touching or disposing capacitors with activated break-action mechanism, please consider that even after days and weeks these capacitors may still be charged with high voltages!

Make also sure to consult your national rules and restrictions for waste and disposal.

SWITCHING AND DISCHARGING

Our power capacitors are designed to withstand high surge currents manifold their rated current. Even so, repetitive high inrush currents may damage capacitors and should therefore be avoided by

A. suppressing switching currents by the use of special capacitor contactors, see pages 40 to 42.

B. eliminating inrush currents by the use of suitable thyristor switches, see pages 43 to 46.

C. avoiding re-connection in phase opposition by the use of proper discharge resistors or reactors, see pages 47 to 51.

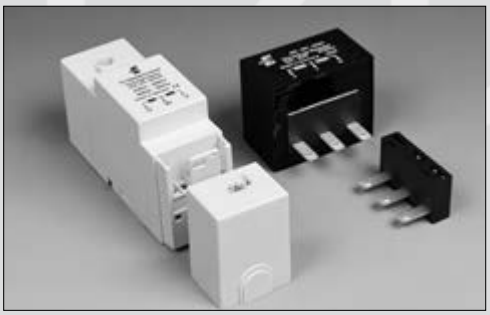

SWITCHING AND DISCHARGING CAPACITORS

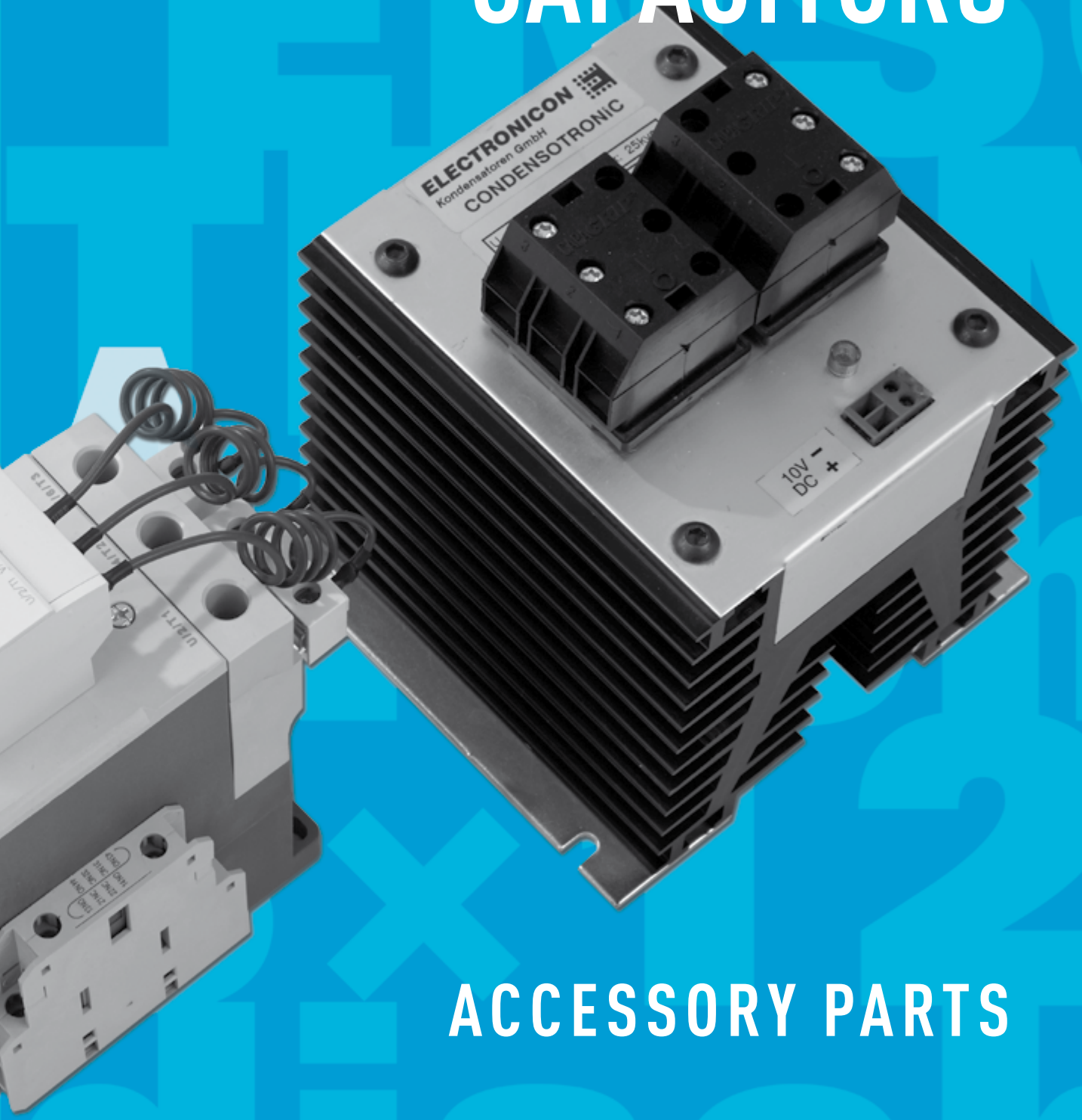

ACCESSORY PARTS

CAPACITOR CONTACTORS
1301A SERIES

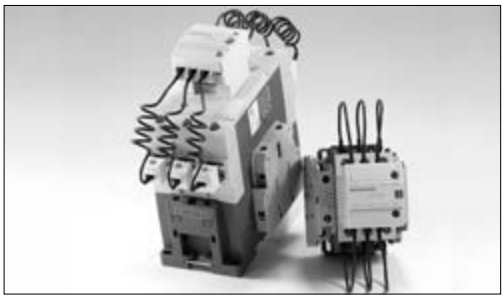

Power capacitors may enter high-frequency resonances with nearby inductances when being connected to the mains. Though vanishing within a few microseconds, such resonances lead to very high current surges which, if occurring regularly, may damage the capacitor elements. In accordance with IEC EN 60831-1/2, the annual number of switching operations for our standard capacitors is therefore recommended not to exceed 5000...6000 counts p.a. Special capacitors suitable for a higher annual number of switchings are available on request.

For flawless operation of our capacitors, we strongly recommend using special capacitor contactors with inrush-limiting ("leading") contacts. Such devices connect a preload channel several milliseconds prior to closing their main contact. This channel is choked down by special current limiting resistors and substantially softens the initial switching inrush surge, protecting the capacitors from destructive current surges and the contactors from premature deterioration or welding.

Our 1301A contactors are using a mechanical principle for switching the pre-load contacts. The pre-load contacts and damping resistors are supplied as a separate part and are snapped onto the main switch.
As soon as the main switch has been closed, the pre-load contacts are released again and their resistor wires taken out of circuit after no more than 5...10ms of operation. This avoids additional heat losses in the resistor wires during the operation of the capacitor branch, and contributes to the high reliability and long operational life of our contactors.

Since the disconnection of inductive loads is usually accompanied by switch arcs, the pre-load contacts of certain capacitor contactors may often face trouble when used with reactor-capacitor combinations (detuned capacitors) as they are lagging behind the main contact during the switch-off process. The contactors of our 1301A series are not affected by this problem as their pre-load contacts are already out of circuit. Hence they can be used for both detuned and non-detuned capacitor installations. ELECTRONICON strongly recommends the usage of contactors with pre-load contacts even for detuned capacitors in order to assure undisturbed switching and prevent ferro-resonances of the reactor during the start-up period.

The 1301A is enclosed in a compact, finger proof housing (IP20). Its sealed structure prevents the exposure of any arc flashes. The contactors comply with both IEC and UL standards, including UL's type II coordination requirements.

General Technical Data

design	magnetic, three phase, with mechanical pre-load contacts for inrush protection
voltage range	U_{mains} = 220 ... 550 V
control voltage	220...250 Vrms
operating temperature	-40°C/D
mounting	DIN hat rail W x H = 35 x 7.5 mm or base mounting lugs for ø5 mm screws
snap-on auxiliary contacts	available on request
standards	IEC EN 60947-4-1, UL508
approval marks	(available on request) UL

DIMENSION DRAWINGS

Type Range

order no.	1301A.C0...			1301A. C7...	
	9-12.5	9-25.0	9-33.3	5-54.0	5-60.0
rated current @50°C	<18 A	<36 A	<48 A	<87 A	<92 A
max. kvar 220...240 V	<6.7	15	20	30	35
max. kvar 400...440 V	<12.5	25	33.3	54	60
max. kvar 500...550 V	<18	36	48	78	92
drawing	A	B	B	C	C
permitted switchings/hour	up to 240			up to 100	
contact life (switchings, non-detuned)	200,000			100,000	
preload contacts (obligatory accessory part)	1302A.C09-00.0			1302A.C75-00.0	
permitted operating temperature	-30 ... +60°C				

Dimension Drawings

A.

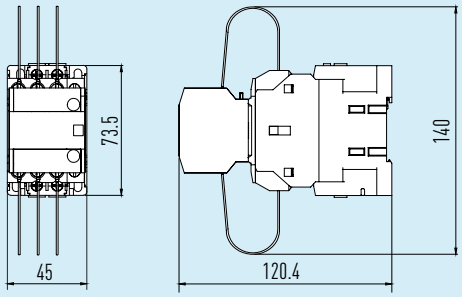

cable cross section
with ferrule: ≤ 4 mm²

B.

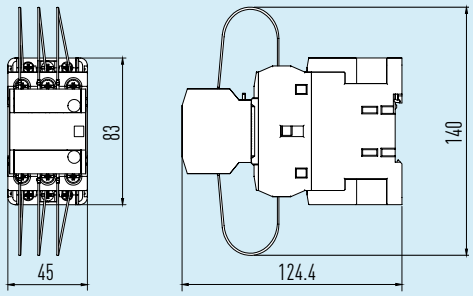

cable cross section
with ferrule: ≤ 16 mm²

C.

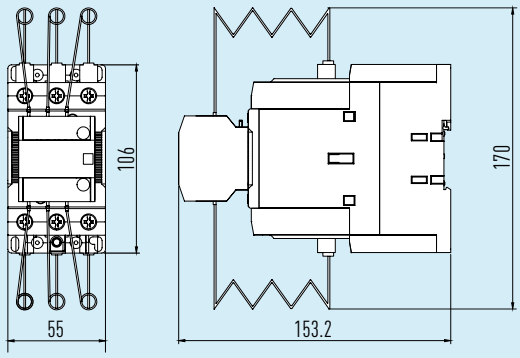

cable cross section
with ferrule: ≤ 35 mm²

THYRISTOR SWITCHES

Other than conventional contactors, our semiconductor-based switches allow for exact determination of the switching moment to the millisecond. This brings about two advantages:

1. Connection of the capacitor exactly at the moment of equal voltage between mains and capacitor element(s): this eliminates inrush effects almost completely without the need for current-limiting resistors, substantially enhancing the operating conditions for the capacitor and resulting in a longer life expectancy.
2. Instantaneous power factor correction for rapidly changing loads: certain reactive loads, e.g. spot welding equipment or elevator systems, call for a high amount of power factor correction for short but very frequent periods. Thyristor switches are capable of multiple switching operations per minute. Since they always switch at zero-voltage-differential (see pt.1), the capacitors do no longer need to be discharged before re-connection, and can sustain substantially higher numbers of connections as compared with conventional magnetic contactors.

Discharge resistors and thyristor switches:
Thyristor switched capacitors do not require discharge resistors for proper operation. For the purpose of maintenance safety, however, all power capacitors are required to be equipped with bleeding resistors ensuring a discharge below 75V within no more than 3 minutes after disconnection. When selecting the discharge resistors for thyristor-switched capacitors, please consider the following important points:

1. Due to carrier storage effects during switch-off, thyristor switches may charge the capacitor with an overvoltage of up to 1.43 × U AC (= ca. 2 × U rms) at the moment of disconnection. This is unproblematic for ELECTRONICON power capacitors, however frequent switching may overheat and even destroy the bleeding resistors.
2. Certain thyristor switches keep disconnected capacitors constantly charged at maximum AC voltage in order to provide a defined "point of re-entry". This permanent voltage will then be up to 1.41 times above the rated voltage of discharge resistors normally used for "standard" power capacitors!

The resistors integrated in our CAPAGRIP K and CAPAGRIP II terminals are usually rated for the nominal voltage of the connected capacitor and a discharge below 50 V within less than 60 seconds; in the 525 V range, the resistors are dimensioned for such discharge from 480 Vrms (= 680 Vac). They are not suitable for the operation with thyristor switches. You are therefore required to use capacitors from our Heavy Duty ranges with CAPAGRIP L or M terminals instead and select suitable resistor modules from our selection charts on pages 49ff.

Use resistors with a rated voltage of at least 2.2 × U_N. As a rule, our 275.106 modules rated 1000 V will be sufficient for equipment in 400 or 415 V mains.

Remember that the discharge is relevant for safety aspects only. Select resistor values which serve for a discharge of the capacitors below 75V within 3 or – even better – 5 minutes. This drastically reduces the power dissipation losses of the resistors.

Five minutes discharge period is not specified by standard IEC EN 60831. Make sure to place an appropriate warning sticker on capacitors or equipment if selecting resistors this way.

CONDENSOTRONIC CT 2000

YOU'LL BARELY FIND A MORE COMPACT ONE

Immediate compensation of inductive reactive power is very often the only way to cope with disturbances imposed on the mains by huge, rapidly changing inductive loads. Conventional capacitor switching devices with reaction periods of 20...90 seconds cannot comply with such intensive requirements.

The CONDENSOTRONIC thyristor switch module makes reaction times of 1...20 milliseconds possible. The switching is done, practically without reactive effects, at zero voltage level (no voltage between input and output).

CONDENSOTRONIC has a very compact design, convenient connection, integral overheating protection, and LED indication for the switching signal and excessive temperature. For optimized cooling, a controllable fan is included.

The CONDENSOTRONIC CT2000 thyristor switch works according to the W3C-2 switching principle, i.e. phase L3 will not be switched.

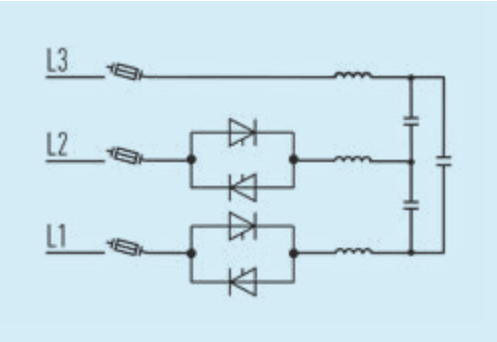

CT 2000 Switching Principle

General Technical Data

design	two controlled phases (semi-controlled)
indications	LED
voltage range	U_{mains} = 400...525 V (other voltages on request)
signal voltage	10 V ± 2 V DC
response time	0.2...15 ms
recovery time	40 ms
max. altitude	1000 m a.s.l.
ambient operating temperature	-10...40°C
storage temperature	-40...85°C
relative humidity	10...95 % (no condensation permitted)
degree of protection	IP20
mounting position	optional

CONDENSOTRONIC CT 2000

for latest edition and updates
check www.powercapacitors.info

Type Range

type	Q_C (kvar)	U_N (V)	I_{max} (A)	power losses ($W@I_{max}$)	Fan	dimensions (mm) L	W	H	weight (kg)	order code
CT2000-25/3/440	25	380 ... 440	50	110	x	145	165	174	3.5	12442.050-10.0
CT2000-25/3/525	25	500 ... 577	38	110	x	145	165	174	3.5	12572.038-10.0
CT2000-50/3/440	50	380 ... 440	100	220	x	145	165	174	3.5	12442.100-10.0
CT2000-50/3/525	50	500 ... 577	77	220	x	145	165	174	3.5	12572.077-10.0

Dimension Drawings

CT 2000-25/CT 2000-50

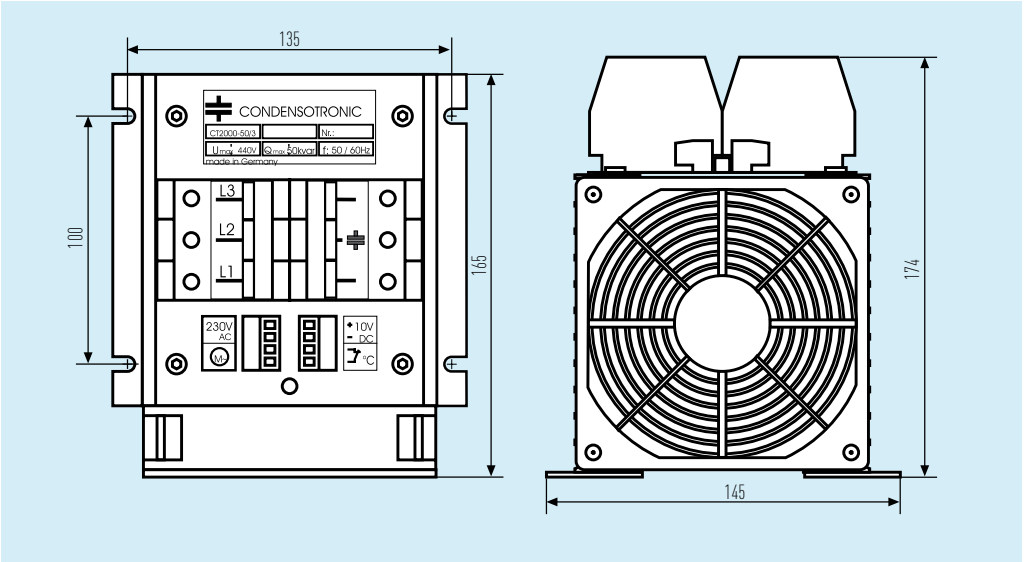

TS 12-2

MODERN THYRISTOR SWITCHES FOR YOUR STATIC PFC SYSTEM

The new thyristor switch modules of our TS12-2 series can switch within 20 milliseconds. Other than CT2000, the TS12-2 is kept charged at peak voltage after disconnection. The switching is done, practically without reactive effects, at peak voltage mains level, i.e. when there is no voltage differential between mains voltage and the charge of the capacitor.

The TS12-2-module has a compact design and integral overheating protection. For powers above 50 kvar, a controllable fan is included.

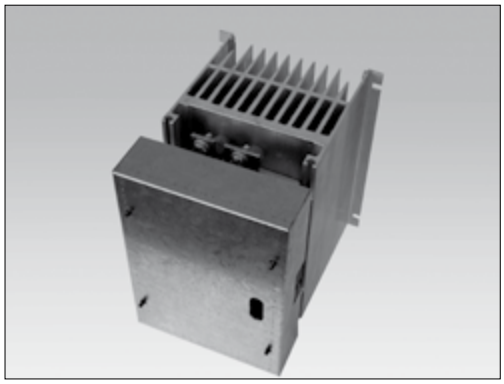

TS12-2 works according to the W3C-2 switching principle, i.e. phase L2 will not be switched.

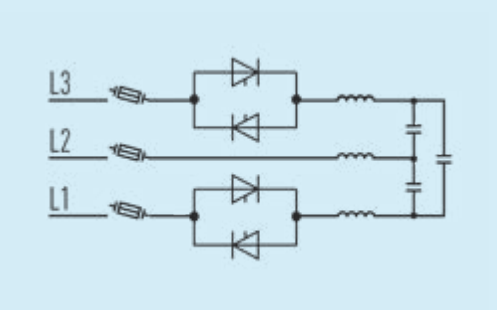

TS12-2 Switching Principle

General Technical Data

design	two controlled phases (semi-controlled)
voltage range	$U_{mains} = U_N$ = 400...690 V (other voltages on request)
control voltage	230 V 50/60 Hz (other voltages on request)
signal voltage	8 - 30 V dc
recovery time	typically 1 period
max. altitude	1000m a.s.l.
ambient operating temperature	-10...45°C (up to 65°C with derated current ratings)
relative humidity	10...95 % (no condensation permitted)
degree of protection	IP10
mounting position	optional

TS 12-2

for latest edition and updates
check www.powercapacitors.info

Type Range

type	U_N (V)	Q_C (kvar)	I_N (A)	max. I_N (A)	power losses (W@I_{max})	Fan	dimensions (mm) L_1	H_1	weight (kg)	order code
TS12-2_400V_36A	400	25	36	47	93	-	-	215	4.3	12402.036-00.0
TS12-2_400V_72A	400	50	72	93	165	-	-	215	4.3	12402.072-00.0
TS12-2_400V_109A	400	75	109	141	283	x	260	215	5.6	12402.109-00.0
TS12-2_400V_144A	400	100	144	187	341	x	260	215	5.6	12402.144-00.0
TS12-2_440V_33A	440	25	33	43	74	-	-	215	4.3	12442.033-00.0
TS12-2_440V_66A	440	50	66	86	153	-	-	215	4.3	12442.066-00.0
TS12-2_440V_99A	440	75	99	129	262	x	260	215	5.6	12442.099-00.0
TS12-2_440V_131A	440	100	131	170	305	x	260	215	5.6	12442.131-00.0
TS12-2_480V_30A	480	25	30	39	67	-	-	215	4.3	12482.030-00.0
TS12-2_480V_60A	480	50	60	78	139	-	-	215	4.3	12482.060-00.0
TS12-2_480V_90A	480	75	90	117	235	x	260	215	5.6	12482.090-00.0
TS12-2_480V_120A	480	100	120	156	276	x	260	215	5.6	12482.120-00.0
TS12-2_480V_150A	480	125	150	195	356	x	260	215	5.6	12482.150-00.0
TS12-2_525V_72A	525	65	72	93	159	-	-	215	4.3	12522.072-00.0
TS12-2_525V_144A	525	130	144	187	325	x	260	215	5.6	12522.144-00.0
TS12-2_690V_42A	690	50	42	54	104	-	-	250	4.6	12692.042-00.0
TS12-2_690V_84A	690	100	84	109	207	x	260	250	5.9	12692.084-00.0

Dimension Drawings

reference example with integrated fan

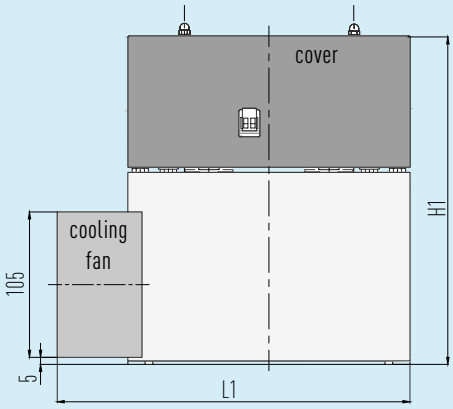

pic.1: Side view with mounted cover

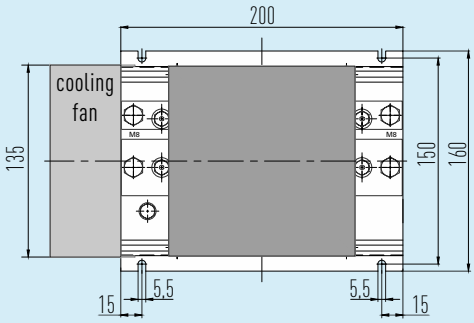

pic.2: Top view with cover removed

DISCHARGE DEVICES

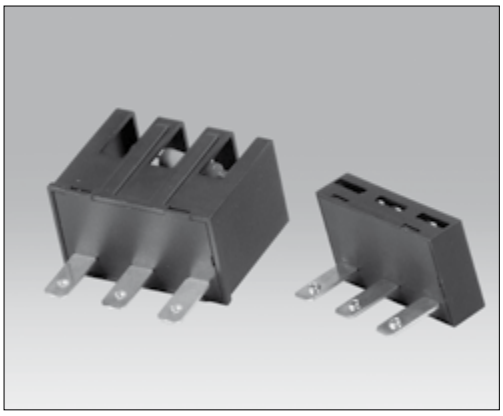

Resistor Modules
Capacitors with CAPAGRIP K and CAPAGRIP II terminals are equipped with discharge resistors for a discharge from their highest nominal voltage rating to less than 50 V within < 60 seconds. For capacitors with CAPAGRIP L, and M, as well as with D terminals we offer separate resistor modules. The correct size of the module to be applied can be selected from the data charts on pages 49f based on applied voltage, required discharge period, and capacitance to be discharged.

Alternatively, the resistors to be used for a given capacitance and operating voltage can be calculated by means of the following formula:

three-phase: $$R \leq \frac{t}{k \times C_T \times \ln \frac{U_B \times \sqrt{2}}{U_E}}$$

single-phase: $$R \leq \frac{t \times 1.5}{C_{total} \times \ln \frac{U_B \times \sqrt{2}}{U_E}}$$

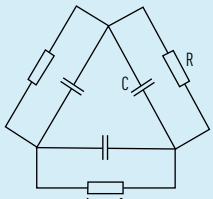

k = 1

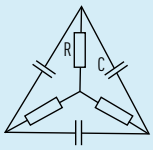

k = 3

t	... Discharge period in (s)	U_B	... Operating voltage
C_T	... Partial capacitance of one phase	U_E	... Maximum permissible voltage after period t
C_{total}	... Total capacitance	R	... Module resistance value

In all cases, the closest smaller discharge module available shall be applied.

The discharge resistors may become very hot (up to 200°C) during continuous operation!
For design L/M only: Remove the lid of the discharge module if applying protective caps to the capacitors!

Sets for CAPAGRIP™ L & M Capacitors (Protection: IP20)
CAPAGRIP™ resistor modules can be connected to single capacitors as well as to groups of parallel units. Both type 1 and 2 are equally compatible with CAPAGRIP™ L or M terminals.

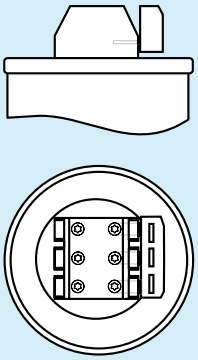

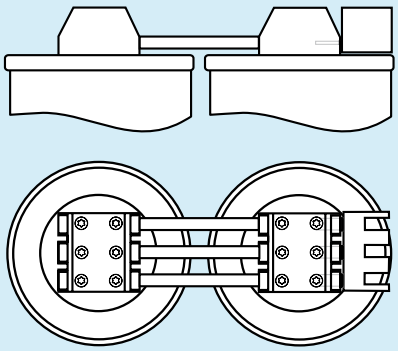

for latest edition and updates
check www.powercapacitors.info

Type 1

Type 2

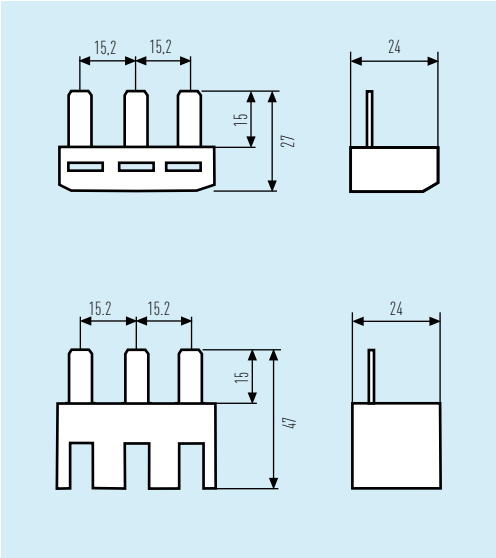

U_{max} (V)	R_N (kΩ)	module type	selection code	order code
1000	3 Y 300	2	(1)	275.106-10300
1000	3 Y 180	2	(2)	275.106-10180
850	3 Y 120	2	(3)	275.106-10120
760	3 × 300	1	(4)	275.100-10300
720	3 × 180	2	(5)	275.105-10180
600	3 × 180	1	(6)	275.100-10180
600	3 × 120	2	(7)	275.105-10120
480	3 × 120	1	(8)	275.100-10120
530	3 × 100	2	(9)	275.105-10100
480	3 × 82	2	(10)	275.105-10082
400	3 × 82	1	(11)	275.100-10082
440	3 × 68	2	(12)	275.105-10068

Sets for Design D1/D3 Capacitors (Protection: IP00)

3ph

1ph

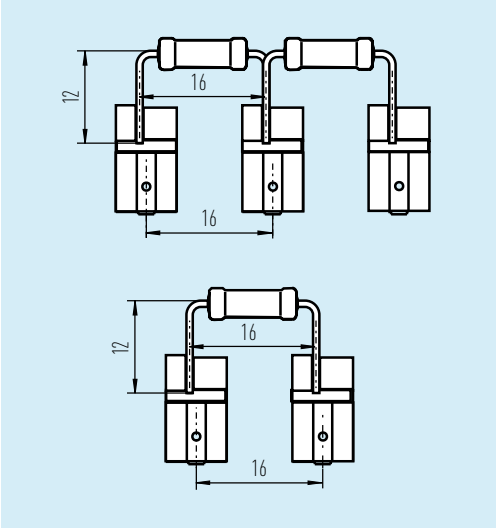

U_{max} (V)	R_N (kΩ)	module type	selection code	order code
three phase				
750	2 × 300	D3	(13)	275.110-10301
630	2 × 200	D3	(14)	275.110-10201
600	2 × 180	D3	(15)	275.110-10181
480	2 × 120	D3	(16)	275.110-10121
single phase				
750	300	D1	(17)	275.111-10301
600	180	D1	(18)	275.111-10181

Selection Charts

The selection charts state the maximum capacitance per voltage level which can be discharged with each resistor module:

1. Select the line of your **operating** voltage. Mind that in detuned systems, the actual voltage at the capacitor is higher than the rated mains voltage.
2. Look for the column with the capacitance which is closest to your capacitor. Look up BLACK figures if you want to discharge below 50 V within no more than 60 seconds. Look up BLUE figures if you want a discharge below 75 V within 3 minutes. Go for GREY figures if 5 min discharge is sufficient.
3. Determine the resistor module to be ordered in the head of the column.

Selection Matrix for CAPAGRIP™ Resistor Modules (3ph, star connected)

capacitor voltage (V)		C_{max} to be discharged (µF)											
U_{max}	U_{AC}	(1)	(2)	(3)	(4)	(5)	(6)	(7)	(8)	(9)	(10)	(11)	(12)
230	325	3×36 3×136 3×227	3×59 3×227 3×379	3×89 3×341	3×107 3×409	3×178 3×682	3×178 3×682	3×267 3×1022	3×267 3×1022	3×320 3×1227	3×391 3×1496	3×391 3×1496	3×471 3×1804
280	395	3×32 3×120 3×200	3×54 3×200 3×334	3×81 3×301	3×97 3×361	3×161 3×601	3×161 3×601	3×242 3×902	3×242 3×902	3×290 3×1082	3×354 3×1319	3×354 3×1319	3×426 3×1591
400	565	3×27 3×99 3×165	3×46 3×165 3×275	3×69 3×247	3×82 3×297	3×137 3×495	3×137 3×495	3×206 3×742	3×206 3×742	3×247 3×891	3×302 3×1086	3×302 3×1086	3×364 3×1310
415	585	3×27 3×97 3×162	3×45 3×162 3×270	3×68 3×243	3×81 3×292	3×135 3×486	3×135 3×486	3×203 3×729	3×203 3×729	3×244 3×875	3×297 3×1067		3×358 3×1287
440	620	3×26 3×95 3×158	3×44 3×158 3×263	3×66 3×236	3×79 3×284	3×132 3×473	3×132 3×473	3×198 3×709	3×198 3×709	3×238 3×851	3×290 3×1037		3×350 3×1251
480	680	3×26 3×91 3×151	3×43 3×151 3×252	3×64 3×227	3×77 3×272	3×128 3×454	3×128 3×454	3×192 3×681	3×192 3×681	3×230 3×817	3×281 3×996		
525	740	3×25 3×87 3×145	3×41 3×145 3×242	3×62 3×218	3×74 3×262	3×124 3×436	3×124 3×436	3×185 3×654		3×222 3×785			
600	850	3×24 3×82 3×137	3×39 3×137 3×229	3×59 3×206	3×71 3×247	3×118 3×412	3×118 3×412	3×177 3×618					
690	975	3×22 3×78 3×130	3×37 3×130 3×217	3×56 3×195	3×67 3×234	3×112 3×390							
760	1075	3×22 3×75 3×125	3×36 3×125 3×209	3×54 3×188	3×65 3×225								
800	1130	3×21 3×74 3×123	3×36 3×123 3×205	3×53 3×184									
850	1200	3×21 3×72 3×120	3×35 3×120 3×200	3×52 3×180									
1000	1415	3×20 3×68 3×114	3×33 3×114 3×189										

C_{max} for discharge < 50 V within 1 min
C_{max} for discharge < 75 V within 3 min
C_{max} for discharge < 75 V within 5 min*

*Recommended for thyristor-switched equipment.
NOTE: Warning about 5 min discharge time should be placed on the equipment.

capacitor voltage		C_{max} to be discharged (µF)					
U_{rms}	U_{AC}	(13)	(14)	(15)	(16)	(17)	(18)
230	325	3×36	3×53	3×59	3×89	107	178
		3×136	3×204	3×227	3×341	409	682
280	395	3×32	3×48	3×54	3×81	97	161
		3×120	3×180	3×200	3×301	361	601
400	565	3×27	3×41	3×46	3×69	82	137
		3×99	3×148	3×165	3×247	297	495
415	585	3×27	3×41	3×45	3×68	81	135
		3×97	3×146	3×162	3×243	292	486
440	620	3×26	3×40	3×44	3×66	79	132
		3×95	3×142	3×158	3×236	284	473
480	680	3×26	3×38	3×43	3×64	77	128
		3×91	3×136	3×151	3×227	272	454
525	740	3×25	3×37	3×41		74	124
		3×87	3×131	3×145		262	436
600	850	3×24	3×35	3×39		71	118
		3×82	3×124	3×137		247	412
690	975	3×22				67	
		3×78				234	

C_{max} for discharge <50V within 1 min
C_{max} for discharge <75V within 3 min

EL-DR DISCHARGE REACTOR
40E.003-60003

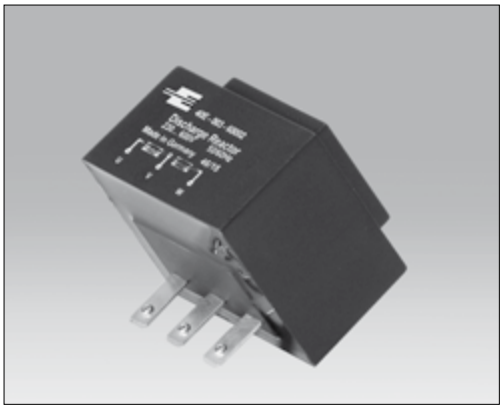

The increasing demand for shorter discharge periods cannot be satisfied by traditional discharge means (fixed resistors). The installation of additional fast discharge resistors at the capacitor contactor results in an increase in material and installation costs. Our discharge reactor replaces the compulsory fixed resistors and additional rapid discharge resistors, and at the same time it reduces the heat dissipation losses inside the capacitor bank. It further avoids additional heating of the capacitor terminals by standard discharge resistors.

Discharge reactors must NOT be used in combination with thyristor switches. Frequent switching and the charging function of many switches will damage the reactor.

General Technical Data

design	two controlled phases (semi-controlled)
construction	dual reactor with iron core in plastic housing
DC resistance per coil	7600 Ohm
duty cycle	continuous operation
rated voltage	230 ... 600 V 3ph, 50/60Hz
capacitor ob e discharged	5 ... 50kvar
connection	direct mounting on capacitor terminal (design L/M)
vibration stress	not permitted
dissipation losses	< 1W
ambient temperature	max. 40° C
degree of protection	IP20
dimensions W × H × D	58 × 49 × 39 mm
weight	290 g
insulation	class B (135°C)
standard	IEC 61558-2-20
CE conformity	2014/35/EU Low-Voltage Directive

Q_c (kvar)	permitted no. of discharges/min at 40°C		discharge period (sec)					
	400...525 V	230 V/600 V	230 V	400 V	440 V	480 V	525 V	600 V
12.5	5	4	12	5	4	4	4	2.6
25	4	3	24	10	9	8	7	5
30	3	2	-	12	10	9	8	6
50	2	1	-	20	17	15	14	10.5

Dimension Drawings

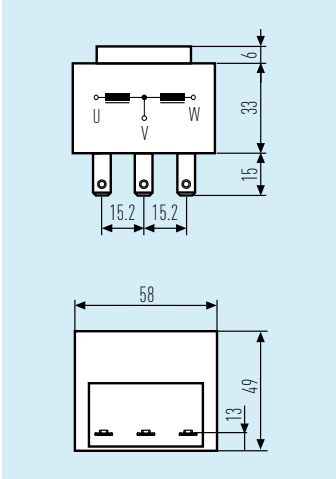

ACCESSORY PARTS

Protective caps for MKP(D) capacitors
Plastic protective caps to protect the capacitor terminals from accidental contact or the influence of dust and water are available as an option.

For diameters up to 60mm, the caps are fitted to the capacitors during manufacture, to give an IP50 rating. In this case, cable and integral discharge resistors are also fitted.

MKP(D)
$D_1 \leq 60$

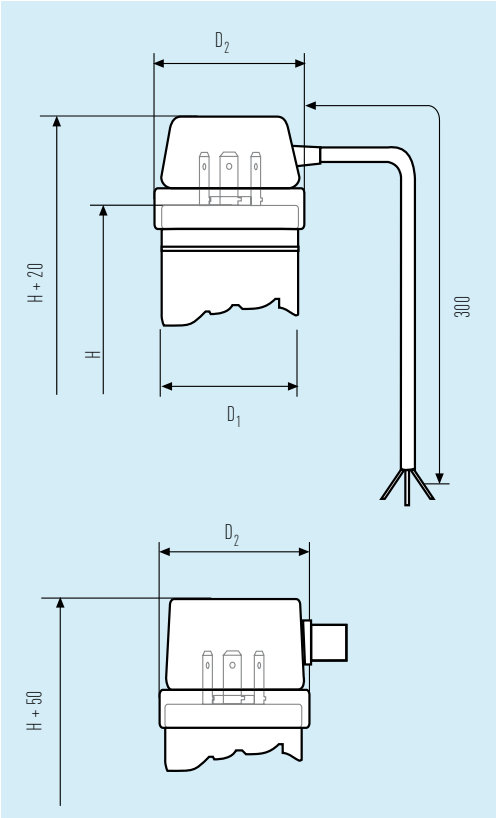

Order code:
„0" in the center group of the capacitor code changes into „K": 276.K××-yyyyyy

D_1 = 65 ... 75

For capacitors in design D3 with diameters of 65 and 75mm, the caps must be ordered as separate parts. Cables and discharge resistors are not included. Note that these caps do not comply with an IP classification.

Order code:
Ø65mm: 275.137-10010
Ø75mm: 275.147-10010

Protective Blank for CAPAGRIP™ M Terminal (IP20)
Type M terminals are designed for accepting 50mm² cables. If one side of the terminal block is not used, then this blank must be fitted to maintain the IP20 rating.

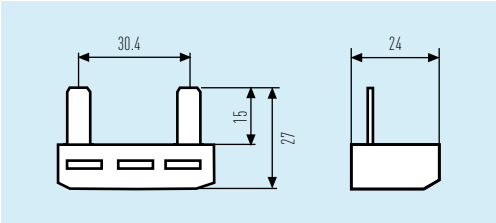

Order code:
275.100-10000 (10/box.)

Holder for Horizontal Mounting

All cylindrical capacitors with diameter 116mm and 136mm can be mounted by means of this bracket on a flat vertical or horizontal surface.

The bracket is made of glass fibre reinforced polyamide and comes as a set including a matching 9mm zinc-plated steel strap for fixation of the capacitor.

Drawings

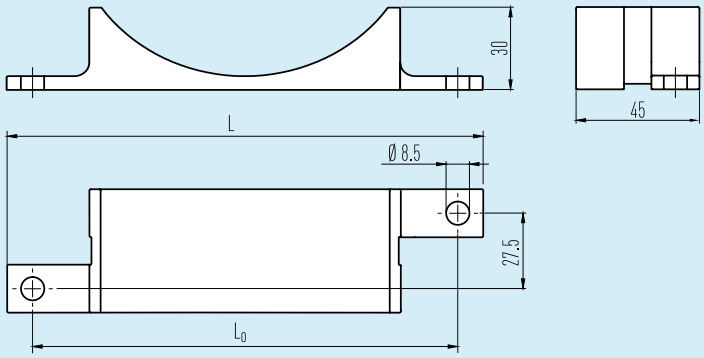

material: glass fibre reinforced polyamid

Example for M3 design

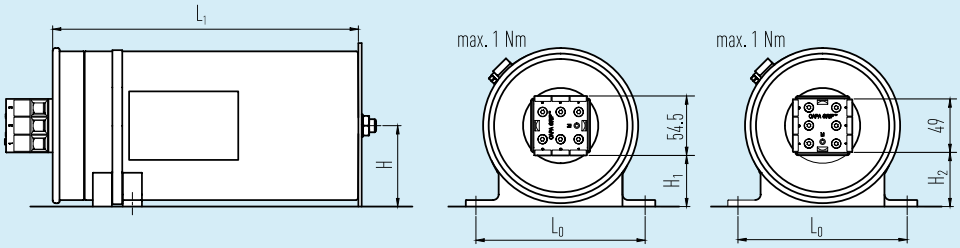

Example of horizontal mounting.

for Diameter	L	L_0	H	H_1	H_2	order no. (10 × mounting set)
116	159	135	64	37	40	E50.H16-100000
136	174	155	74	47	50	E50.H36-100001

DETUNING REACTORS

The growing use of power electronic devices is causing an increasing level of harmonic distortion in the electrical system which very often leads to problems with capacitor installations. This is the reason why more and more energy suppliers demand the installation of detuned capacitors.

A detuned capacitor performs the function of power factor improvement whilst preventing any amplification of harmonic currents and voltages caused by resonance between capacitors and inductances in the electrical system.

By adding an appropriately rated series reactor to the power capacitor, both elements form a **resonating circuit with its resonant frequency below the lowest order harmonic** in the system (usually the 5th). All frequencies above this resonant frequency now see this circuit as inductive hence eliminating the possibility of dangerous resonances being set up between the capacitors and system inductances (provided the reactor has been dimensioned properly).

It has to be ensured, however, that non-detuned capacitors and capacitors with detuning reactors are never operated in the same mains. Such combination may cause unforeseeable interactions and equalising currents leading to damage and destruction of capacitors, reactors, and other components.

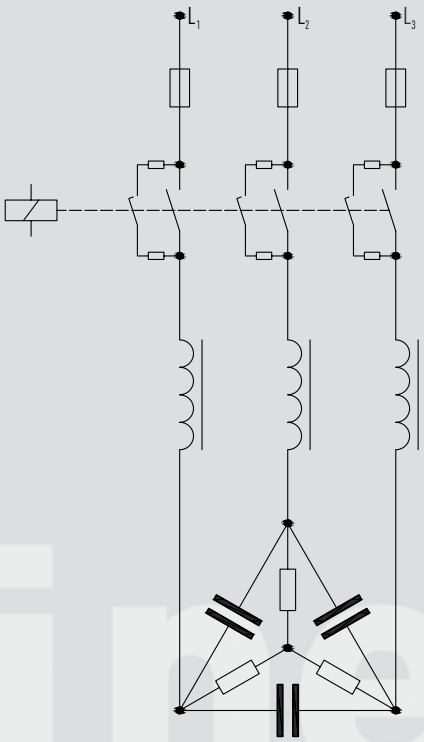

high linea
adapte

DETUNING REACTORS

PROTECTING CAPACITORS

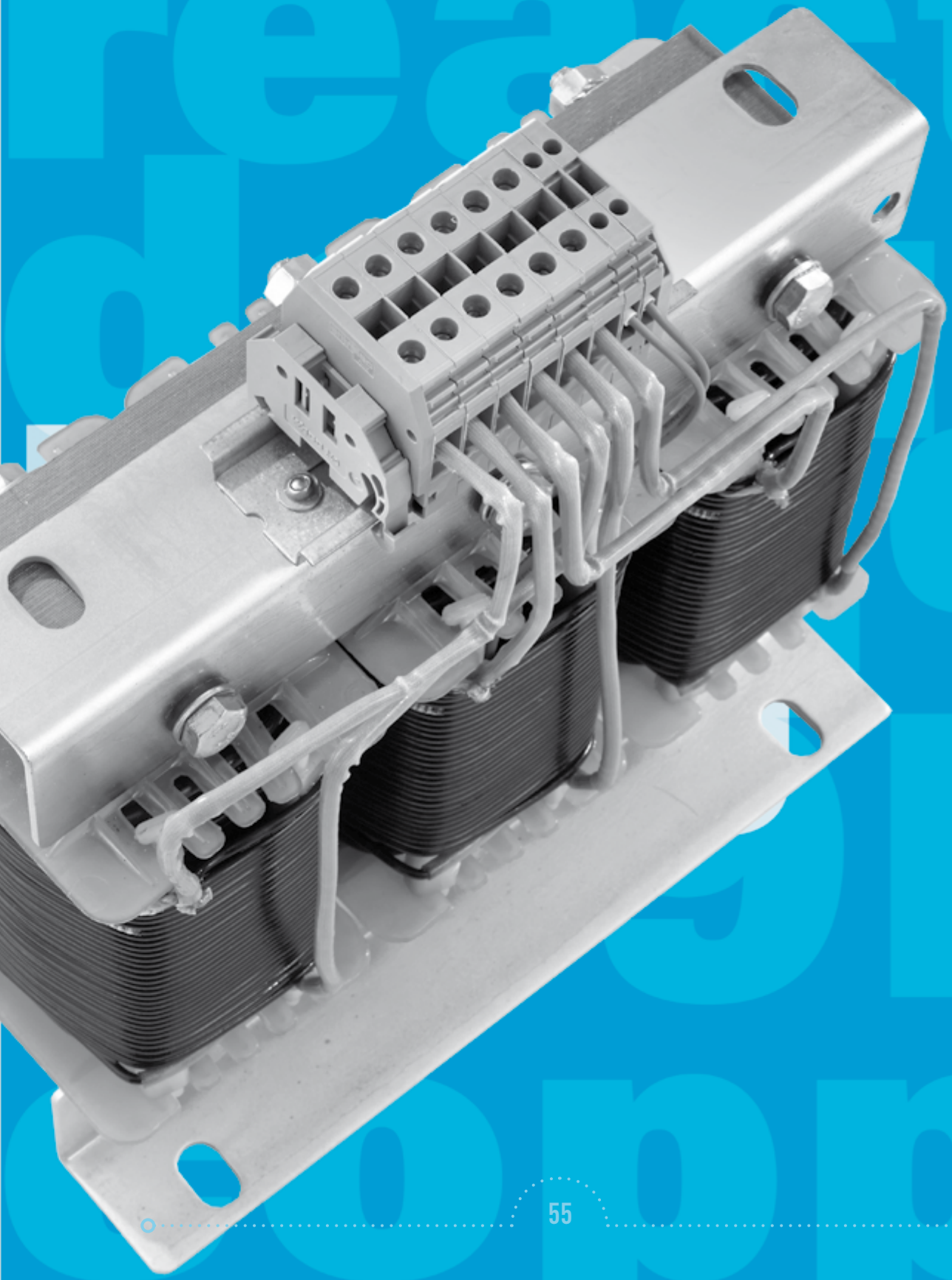

DETUNING REACTORS

Design features

Our filter reactors are made of **high-class transformer sheets** and **copper wire or aluminium band**.

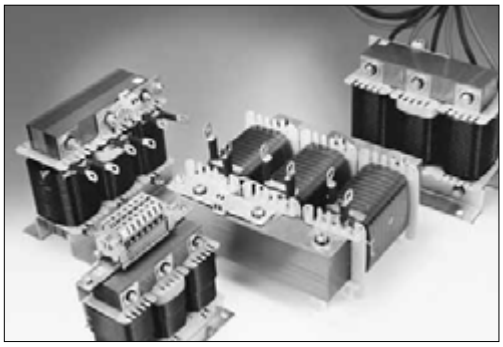

They are dried and impregnated in a vacuum with environmentally friendly, low-styrole resin which ensures they can withstand high voltages, have low noise levels, and offer a long operating life.

Depending on their rated power, the reactors are provided with either terminal blocks or terminal lugs/cables. The connection of the aluminium reactors is made through copper terminals as well, which are reliably connected with the aluminium band by a special, well-proven welding method.

High-class iron cores with multiple air gaps as well as a staid designing approach guarantee **high current linearity** and **low heat dissipation losses,** at the same time allowing for compact dimensions and competitive cost. Compared with low-end reactors, our FK-Dr may save up to 100 Watts of heat dissipation losses per piece, a very important factor for the long-term operational cost (and amortisation) of the equipment.

High insulation class or low temperature rise?

Other than certain manufacturers which take special pride in offering their reactors with insulation class ratings for operation at temperatures of up to 165°C or even beyond, we focus on the operating environment of the the application's key component: the capacitor. In most cases, reactors are placed in close vicinity of the capacitor, and should therefore not serve as a destructive heat source. The conservative layout of our reactors is to limit the maximum temperature of the reactor to 115°C under rated operating conditions. An integrated reversible thermal switch allows external monitoring for disconnection of the reactor in the event of impermissible buildup of heat (>125°C).

How to avoid ferro-resonance

Commercial pressures and the desire for ever smaller switchgear dimensions lead to an increasingly intense utilisation of systems and components. Even the detuning reactors have become more compact, which has been accompanied by a reduction of their internal resistance.

Despite excellent linearity of inductance at high currents - usually the most important criterion when evaluating reactors - problems may occur in operation under unknown mains conditions. e.g. insufficient damping (low impedance) by upstream switchgear components, even at relatively low levels of harmonic distortion. Due to the magnitude of the initial switching current, the inductance of the reactor may break down to a fraction of its nominal value. In these cases, the core becomes saturated; strong audible humming and currents exceeding the rated current can occur. This phenomenon is also called **Ferro-resonance.**

As the use of adequately sized reactors with higher load capability is usually ruled out for cost and space considerations, the use of **capacitor contactors with inrush protection** is recommended in all cases where the mains conditions are not known exactly. These can provide a damping effect which substantially exceeds that achieved by adaptation of the reactor dimensions, and at a much reduced cost.

It should be noted that, even when using capacitor contactors with inrush protection, sufficient current linearity of the reactor must be provided in accordance with its operating conditions.

DEFINITIONS AND SELECTION CRITERIA

Rated Inductance L_N
Inductance rating of the reactor, measured at rated current I_N, in mH (Milli-Henry). Mean value across the three phases.

I_N

Rated Voltage U_N
Root mean square value of the permissible value of sinusoidal AC voltage in continuous operation (mains voltage). The rated voltage of the reactors indicated in the data charts and the permissible overvoltage limits specified in IEC 60831 and DIN EN 50160 must not be exceeded even in cases of malfunction.

U_N

Capacitor Voltage U_C
Required voltage strength of the capacitor. The series connection of capacitor and reactor causes a voltage rise at the capacitor terminals as described by the following formula which must be considered when selecting a capacitor for the application.

U_C

$U_N = 400$ V
$p = 7$ %

$$U_C = \frac{U_N}{\left(1 - \frac{p}{100\%}\right)} = 430.1 \text{ V}$$

Example

The capacitor to be selected must have a voltage strength of at least 430 V.

Detuning Factor p
Ratio between the reactances of reactor X_L and corresponding capacitor X_C (in %).

$$p = 100\% \cdot \frac{X_L}{X_C}$$

p

Series Resonance Frequency f_r
The detuning factor determines the series resonance frequency between reactor and capacitor which in turn is important for the blocking and filtering effect.

$$f_r = f_N \cdot \sqrt{\frac{100\ \%}{p}}$$

f_r

The standard reactors listed in this catalogue have been designed for common detuning factors and resonance frequencies as shown in chart 11:

Detuning factor p	Resonance frequency f_r	
	f_n = 50 Hz	f_n = 60 Hz
5.67 %	210 Hz	252 Hz
7 %	189 Hz	227 Hz
14 %	134 Hz	-

chart 11

Rated Power of the Detuned System Q_{LC}
Care must be taken when stating the reactor power in order to avoid misunderstanding. As a rule, the rated power of a reactor does not describe its real reactance but either the reactive power of the capacitor to be detuned, or the total output of the entire LC-circuit at rated system voltage U_N.

Q_{LC}

There are two principal approaches which are described in detail on the following pages.

I. Non-adapted Rating:
The non-adapted reactor is matched to a power capacitor with standard rating at system voltage. This allows for use of capacitors "off the shelf". However, with the increased output of kvar due to voltage rise inside the LC circuit, more power output is installed than actually required: the kvar output of a capacitor depends on the voltage it is charged with, and at higher voltage, equal capacitance delivers more kvar (in the example below: 26.9 instead of 25 kvar). In this case, the rated power of the capacitor is used to define the reactor rating.

Caution: Bear in mind that the capacitors to be detuned will be exposed to increased voltage; excessive voltage load may lead to reduced life or even failure or destruction of the capacitor!

Check capacitance and general state of the capacitors before adding detuning reactors to existing non-detuned systems as these may have been harmed by their previous operation without reactor protection!

Example

Capacitor 275.186-516600 (page 27) with 25kvar 400V 50Hz 3 × 166µF (498µF) shall be detuned to 189Hz (p = 7%).

Calculation

Step 1: Determination of the reactor

Capacitor Reactance
$X_C = \frac{1}{2\pi f \cdot C} = 6.39\ \Omega$

Required reactance of the reactor
$X_L = X_C \cdot p = 6.39\ \Omega \cdot 0.07 = 0.45\ \Omega$

Required inductance
$L = \frac{X_L}{2\pi f} = 1.432\ \text{mH}$

Step 2: Calculation of resulting PFC current and net kvar output into the mains

PFC current
$X_{total} = X_C - X_L = 5.94\ \Omega$
$I_C = \frac{U_{mains}}{X_{total}} = \frac{400\ \text{V}}{5.94\ \Omega} = 67.3\ \text{A}^*$

Real PFC output into mains
$Q_{LC} = U_{mains} \cdot I_C = 400\ \text{V} \cdot 67.3\ \text{A}$
$= 26.9\ \text{kvar}$

Selection from catalogue

Step 1: Determination of the reactor
Alternatively, reactors matching the most common capacitor ratings can be selected directly from our data charts of reactors with "non-adapted rating" (page 48):

Look up the mains voltage 400 V in combination with 7 %

Select the capacitance of your intended capacitor (3 × 166 µF)

Find 444.125-40D2A "FK-Dr 25/400/50/7/D"

Step 2: Determination of net kvar output into the mains and calculation of PFC current

Look up the kvar value under Q_{LC} (U_N): 26.9 kvar

Calculate PFC current:
$I_C = \frac{Q_{lc}}{U_N} = \frac{26.900\ \text{var}}{400\ \text{V}} = 67.3\ \text{A}^*$

(*current over three phases = phase current · $\sqrt{3}$)

II. Adapted Rating:
The adapted reactor is designed to create – in combination with a specially sized capacitor - exactly the desired output of reactive power, allowing for the internal voltage rise inside the resonating circuit.
Advantage: The exact power is installed as required by the customer, and switching devices are stressed less.

Dla

25kvar 400V 50Hz to be detuned to 189Hz (p = 7%)

Example

Calculation

Step 1: Calculation of the capacitor

Current for the power factor correction of 25 kvar 400 V 50 Hz

$$I_C = \frac{Q_c}{U_{mains}} = \frac{25000\ \text{var}}{400\ \text{V}} = 62.5\ \text{A}$$

Voltage at capacitor terminations

$$U_C = \frac{U_{mains}}{1-p} = \frac{400\ \text{V}}{1-0.07} = 430\ \text{V}$$

Adjustment of necessary capacitance

$$C = \frac{I_C}{2\pi f \cdot U_C} = \frac{62.5\ \text{A}}{430\ \text{V} \cdot 2\pi \cdot 50\ \text{Hz}} = 463\ \mu\text{F}$$

463µF = 3 · 154µF 275.286-515400 "28.2 kvar 440V 50Hz" (page 27)

Step 2: Calculation of the reactor

Capacitor Reactance

$$X_C = \frac{1}{2\pi f \cdot C} = \frac{1}{2\pi \cdot 50\ \text{Hz} \cdot 463\ \mu\text{F}} = 6.88\ \Omega$$

Required reactance of the reactor

$$X_L = X_C \cdot p = 6.88\ \Omega \cdot 0.07 = 0.48\ \Omega$$

Required inductance

$$L = \frac{X_L}{2\pi f} = \frac{0.48\ \Omega}{2\pi \cdot 50\ \text{Hz}} = 1.53\ \text{mH}$$

> 444.125-4032A "Fk-Dr 25/400/50/7/Dla" (page 67)

Selection from catalogue

Step 1: Determination of the reactor
Alternatively, reactors matching the most common capacitor ratings can be selected directly from our data charts of reactors with "adapted rating" (page 67):

Look up the mains voltage 400 V in combination with 7 %

Select the required output power of the capacitor branch under "Power Output Q_{LC} (U_N)": 25 kvar

Find 444.125-4032 A "FK-Dr 25/400/50/7/Dla"

Step 2: Determination of the matching capacitor

Look up the corresponding capacitance value in column "Capacitor C": 3 × 154 µF

Select a proper capacitor with the capacitance found under 1.) from the data charts for capacitors on pages 26 to 33. Make sure to obey the minimum voltage rating U_C for the capacitor as stated in column "U_N" (here: > 430 V).

Dissipation Power P_{eff}
Sum of all iron-, copper-, and stray field losses at max. specified overvoltage and harmonic content. Depending on the detuning factor, the effective dissipation power of our reactors is between 4 and 6 W/kvar.

Rated Current (also: Fundamental Current) I_N
RMS value of the current – caused by the series-connected capacitor – at rated voltage and frequency, excluding harmonic distortion, switching transients, and tolerance of capacitance.

RMS Current I_{eff}
Current load on the reactor in permanent operation, caused by the fundamental wave plus harmonics in the system. For all data given in this catalogue, we are presuming a 10 % increase of the fundamental current I_N, resulting from voltage tolerances as permitted by DIN EN 50160: $I_{eff} = \sqrt{(I_1^2 + I_3^2 + I_5^2 + \ldots + I_n^2)}$ $I_1 = 1.1 \cdot I_N$

Maximum Current Rating I_{lin} and Current Linearity
Maximum current, up to which the inductance of the reactor remains "linear", i.e. does not decrease by more than 5 % below its rated inductance. This maximum current is specified in the data charts as a multiple K of the fundamental current:
$I_{lin} = K \cdot I_N$ ($I_{lin} \geq 0.95\ I_N$!) K ... overcurrent factor

Exceeding I_{rms} or I_{lin} will cause increased power losses inside the reactor and may result in its thermal destruction. We recommend thermal monitoring of the reactors by means of the integrated temperature switch, or the use of switching devices with overcurrent relays in the capacitor circuit, to protect against overloads.

Ambient Operating Conditions
Permissible ambient conditions for safe operation of the reactor. For our reactors, we specify the climate category in the data charts as "CTT" in accordance with DIN EN 50019 and DIN EN 60934/IEC 60439-1:

C	climatic areas	TT	$\Theta_{ambient}$	$\Theta_{average}$ in 24 h
T	„Moderate climate"	45	-5 ... 45°C	≤ 40°C
		50	-5 ... 50°C	≤ 45°C
		55	-5 ... 55°C	≤ 50°C

chart 12

Under these conditions, the temperature of our low loss reactors does not exceed 115°C which is an important advantage for the capacitors and all other components in the installation. Please consult us if you require reactors for more severe ambient conditions.

Insulation Class
Maximum permitted operating temperature for the insulation materials used in the reactor. Thanks to careful design and the use of high-class materials, the operating temperature of our low-loss reactors does not exceed 115°C when operated within specification. Our standard rating of insulation class B (135°C) should therefore be sufficient for the majority of your operating environments. Reactors with insulation class F or higher are available as an option on request.

Temperature Switch

response temperature	125°C
voltage	250 V (<6.3 A) ... 500 V (<2 A)
tolerance	± 5 K
terminal	screw clamp 0.75 mm²

All reactors are provided with a separate screw terminal for the temperature switch (NC – normally closed) which is located inside the central coil.

General Technical Data

rated voltages	230...700 V 50 Hz
design	three phase
tolerance of inductance	- 3 ... + 3 % (mean value across three phases)
terminals	terminal blocks, cable lugs temperature-proof flexible cables available on request
winding material	aluminium band or copper wire
core material	low loss iron sheets
safety device	thermal switch
impregnant	polyester resin Class F
insulation class	class B (higher classes available on request)
protection class	IP00 (indoor mounting)
current linearity	see data charts
permitted harmonic load (continuous operation)	U_3 = 0.5 % U_N U_5 = 6 % U_N U_7 = 5 % U_N U_{11} = 3.5 % U_N U_{13} = 3 % U_N
insulation voltage winding to core	3 kV
max. relative humidity	95 %
temperature class	see data charts
cooling	natural
altitude	4000 m.a.s.l.
statistical life expectancy	> 200 000 h (permitted failure rate ≤ 3 %)
standards	IEC EN 61558-2-20:2011, VDE 0570-2, IEC 60076-6:2007, UL508, C22.2 No.14
approval marks	for selected types

CE Conformity

All reactors listed in this catalogue comply with the relevant regulations and guidelines of the European Union: 2014/35/EU (Low-Voltage Directive)

This is proven by the technical documentation and compliance with the following standards: IEC EN 61558-2-20:2011, IEC EN 60076-6:2007

DIMENSION DRAWINGS

Dimension Chart

Code	L (mm)	H (mm)	Design A B (mm)	Design B B (mm)	pcs./pallet	pallet height (mm)
A1	155	140	78	-	48	350
A2	155	140	92	85	36	350
B1	190	165	82	87	33	350
B2	190	165	92	97	27	350
B3	190	165	102	107	24	350
B4	190	165	126	131	20	350
C1	240	215	121	112	20	550
C2	240	215	131	122	20	550
C3	240	215	141	132	18	550
C4	240	215	151	142	16	550
C5	240	215	155	146	12	550
D2	300	265	165	139	10	550
D3	300	265	177	152	10	550
D4	300	265	192	167	10	550
D5	300	265	203	178	8	550
F3	300	190	166	-	10	350
F4	300	190	180	155	10	350
F5	300	190	191	166	10	350
F6	300	190	201	175	10	350
G1	240	255	121	112	16	550
G2	240	255	153	144	12	550
H1	420	370	188	190	8	600
I1	300	315	166	141	10	600

Type 1

Connection Type 1

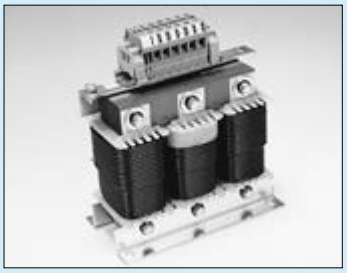

Type 1: Screw terminal block, 10 mm²
Available with copper windings only

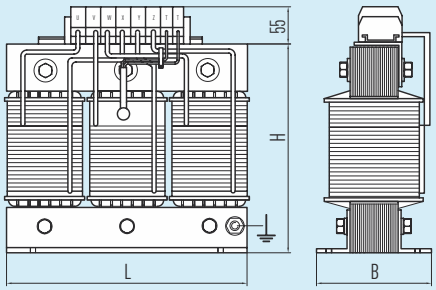

Type 2

Connection Type 2

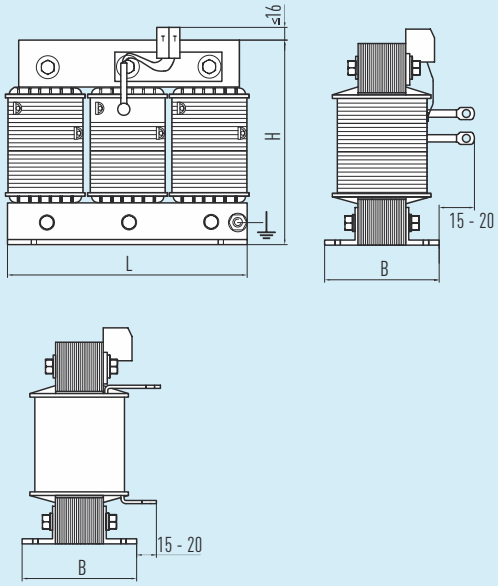

Type 2: Cable lug (tinned copper)
Available with copper or aluminium windings

Type 3

Connection Type 3

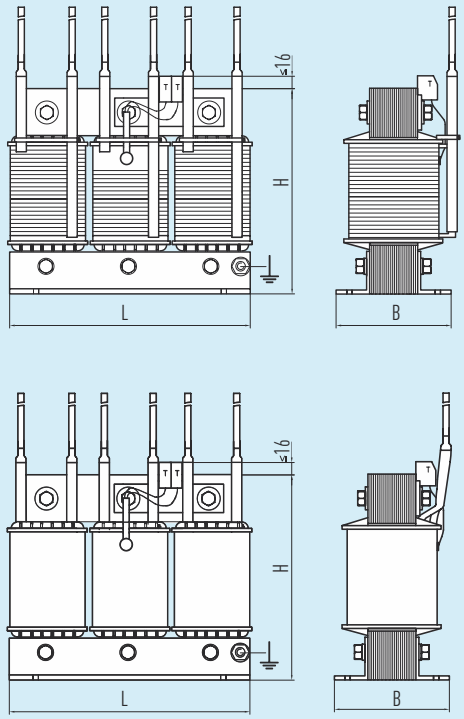

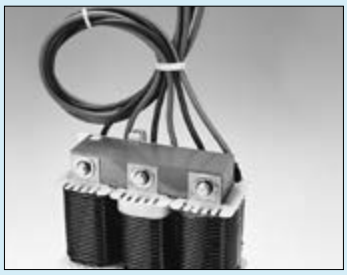

Type 3: Flexible cable,
temperature proof up to 140°C,
length: 500 or 800 mm
Available with copper or aluminium windings

Design A

Mounting Design A

Standard version
with base mounting bracket

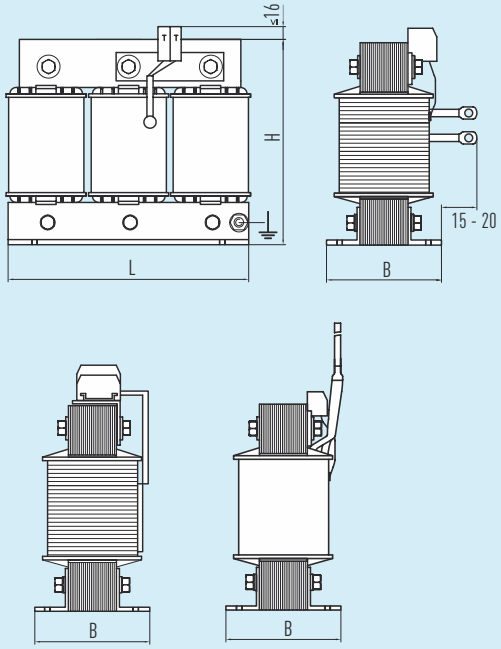

Design B

Mounting Design B

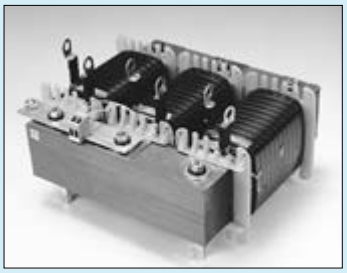

Four threaded bolts (M6i or M8i)
for lateral mounting

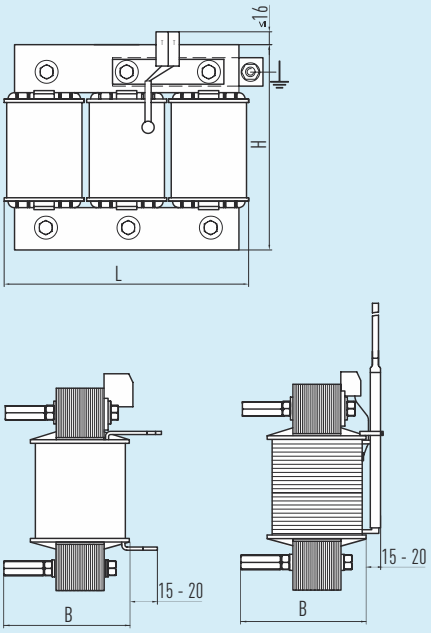

Design 2in1

This very compact design combines two partial powers in one unit. They can be operated independently from each other.

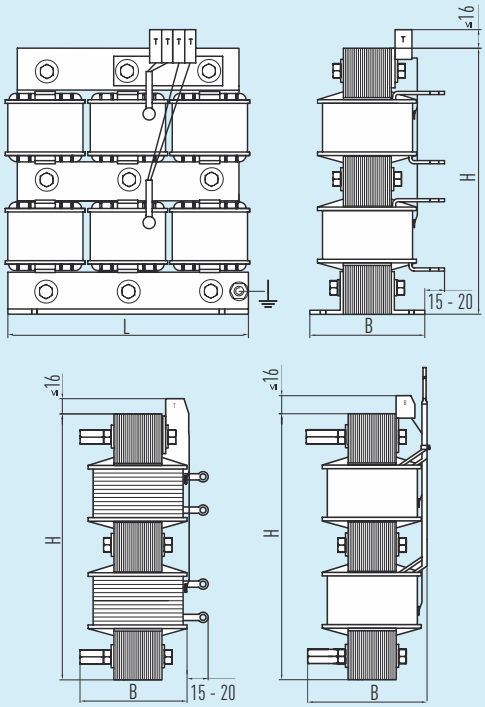

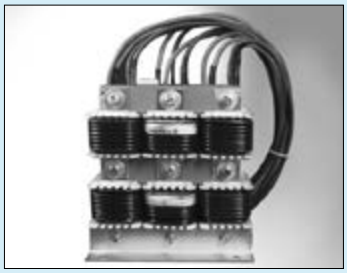

Available terminals: type 2 and 3.
Available designs: A and B.

Design 2in1

DIMENSION DRAWINGS

FK-Dr

NON-ADAPTED RATING (D)

5.67 %, 7 %

for latest edition and updates
check www.powercapacitors.info

Reactors for standard capacitors (non-adapted rating)

Power Output Q_{LC} (U_N) (kvar)	Capacitor C_N (µF)	Reactor / Drossel type designation FK-Dr ...	winding	L_N (mH)	I_{eff} (A)	Temp. class	size (S.pg. 62)	weight (kg)	order code (standard version)	connection / design 1	2	3	A	B
U_N 400 V	U_C > 430 V	p = 7 % (189 Hz)		I_{lin} 1.8 I_N										
13.4	3 × 82	12.5/400/50/7/D	Cu	3 × 2.88	22.5	T50	B2	8	428.094-40D2A	○	●	○	●	○
26.9	3 × 166	25/400/50/7/D	Cu	3 × 1.43	45.5	T50	C2	17	444.125-40D2A		●	○	●	○
26.9	3 × 166	25/400/50/7/D	Al	3 × 1.43	45.5	T50	C4	17	444.326+40D3A		●	○	●	○
53.8	3 × 332	50/400/50/7/D	Cu	3 × 0.71	91	T50	F5	31	458.259-40D2A		●	○	●	○
53.8	3 × 332	50/400/50/7/D	Al	3 × 0.71	91	T45	F4	26.4	458.258+40D3A0		●	○	●	○
U_N 415 V	U_C > 460 V	p = 7 % (189 Hz)		I_{lin} 1.8 I_N										
26.9	3 × 154	25/415/50/7/D	Cu	3 × 1.54	43.9	T50	C2	16	444.125-42D2A		●	○	●	○
26.9	3 × 154	25/415/50/7/D	Al	3 × 1.54	43.9	T50	C4	17	444.326+42D3A0		●	○	●	○
53.8	3 × 308	50/415/50/7/D	Cu	3 × 0.77	87.8	T50	F5	33	458.259-42D2A		●	○	●	○
53.8	3 × 308	50/415/50/7/D	Al	3 × 0.77	87.8	T45	F6	30.5	458.260+42D3A		●	○	●	○
U_N 415 V	U_C > 460 V	p = 5.67 % (210 Hz)		I_{lin} 2.2 I_N										
5.7	3 × 33	5.4/415/50/5.67/D	Cu	3 × 5.76	10.4	T50	B1	6	407.093-42B10	●	○	○	●	○
10.6	3 × 62	10/415/50/5.67/D	Cu	3 × 3.09	19.5	T50	B2	8.5	425.094-42B10	●	○	○	●	○
13.3	3 × 77	12.5/415/50/5.67/D	Cu	3 × 2.49	24.2	T50	B3	9	428.095-42B10	●	○	○	●	○
21.2	3 × 123	20/415/50/5.67/D	Cu	3 × 1.55	38.6	T50	C1	15.6	440.125-42B20		●	○	●	○
26.5	3 × 154	25/415/50/5.67/D	Cu	3 × 1.24	48.4	T50	C3	18.5	444.126-42B20		●	○	●	○
53	3 × 308	50/415/50/5.67/D	Al	3 × 0.62	96.7	T50	D3	32.6	458.157+42B300		●	○	●	○
U_N 690 V	U_C > 760 V	p = 7 % (189 Hz)		I_{lin} 1.8 I_N										
26.8	3 × 56	25/690/50/7/D	Cu	3 × 4.22	26.5	T50	C2	17.5	444.125-69D2A		●	○	●	○
53.7	3 × 111	50/690/50/7/D	Cu	3 × 2.12	53	T50	D2	30	458.156+69D3A0		●	○	●	○
80.6	3 × 168	75/690/50/7/D	Cu	3 × 1.41	80	T55	D5	42	468.160+69D3A0		●		●	○
107.5	3 × 223	100/690/50/7/D	Al	3 × 1.06	106	T55	H1	68	478.209+69D3A0		●		●	○
U_N 690 V	U_C > 760 V	p = 5.67 % (210 Hz)		I_{lin} 2.2 I_N										
26.5	3 × 56	25/690/50/5.67/D	Cu	3 × 3.42	29.3	T50	C2	16	444.125-69B20		●	○	●	○
53	3 × 112	50/690/50/5.67/D	Cu	3 × 1.7	58.5	T50	D3	33	458.157-69B20		●	○	●	○

● standard design
○ other available options

Other ratings, linearities and detuning factors are available on request.

FK-Dr

ADAPTED RATING (Dla)

7 %

Reactors for capacitors with adapted rating

Power Output Q_{LC} (U_N) (kvar)	Capacitor C_N (µF)	Reactor / Drossel type designation FK-Dr ...	winding	L_N (mH)	I_{eff} (A)	Temp. class	size (S.pg. 62)	weight (kg)	order code (standard version)	connection / design 1	2	3	A	B
U_N 400 V	U_C > 430 V	p = 7 % (189 Hz)		I_{lin} 1.8 I_N										
5	3 × 31	5/400/50/7/Dla	Cu	3 × 7.7	8.5	T55	A2	4.5	407.074-4031A0	●	○	○	●	○
6.25	3 × 39	6.25/400/50/7/Dla	Cu	3 × 6.13	10.6	T55	A2	5	412.074-4031A	●	○	○	●	○
10	3 × 62	10/400/50/7/Dla	Cu	3 × 3.83	16.9	T55	B1	6.9	425.093-4032A	●	○	○	●	○
12.5	3 × 77	12.5/400/50/7/Dla	Cu	3 × 3.07	21.2	T55	B2	8.3	428.094-4032A	●	○	○	●	○
2 × 12.5	2 × 3 × 77	2/12.5/400/50/7/Dla	Cu	2 × 3 × 3.07	21.2	T55	G1	16	428.241-4032A	●	○	○	●	○
20	3 × 123	20/400/50/7/Dla	Cu	3 × 1.92	33.8	T50	C1	13.5	440.124-4032A		●	○	●	○
25	3 × 154	25/400/50/7/Dla	Cu	3 × 1.54	42.3	T55	C2	15.4	444.125-4032A		●	○	●	○
25	3 × 154	25/400/50/7/Dla	Al	3 × 1.54	42.3	T50	C3	17	444.126+4033A		●	○	●	○
2 × 25	2 × 3 × 154	2/25/400/50/7/Dla	Cu	2 × 3 × 1.54	42.3	T55	G2	26	444.273-4032A		●	○	●	○
2 × 25	2 × 3 × 154	2/25/400/50/7/Dla	Al	2 × 3 × 1.54	42.3	T55	I1	34.5	444.266+4033A0		●	○	●	○
30	3 × 185	30/400/50/7/Dla	Al	3 × 1.28	51	T55	F3	21	450.256+4033A0		●	○	●	○
40	3 × 246	40/400/50/7/Dla	Cu	3 × 0.96	67.6	T55	F4	27	454.258-4032A		●	○	●	○
40	3 × 246	40/400/50/7/Dla	Al	3 × 0.96	67.6	T55	F4	26	454.258+4033A0		●	○	●	○
50	3 × 308	50/400/50/7/Dla	Cu	3 × 0.77	84.6	T50	F4	28	458.258-4032A		●	○	●	○
50	3 × 308	50/400/50/7/Dla	Al	3 × 0.77	84.6	T45	F5	29.5	458.259+4033A		●	○	●	○
75	3 × 462	75/400/50/7/Dla	Cu	3 × 0.51	127	T45	D4	42	468.159-4032A		●		●	○
75	3 × 462	75/400/50/7/Dla	Al	3 × 0.51	127	T45	D4	39	468.159+4033A		●		●	○
100	3 × 616	100/400/50/7/Dla	Al	3 × 0.38	170	T45	D5	45.5	4H0.160+4033A0		●		●	○
U_N 415 V	U_C > 450 V	p = 7 % (189 Hz)		I_{lin} 1.8 I_N										
12.5	3 × 71	12.5/415/50/7/Dla	Cu	3 × 3.3	20.4	T55	B2	7.5	428.094-4232A	●	○	○	●	○
25	3 × 143	25/415/50/7/Dla	Al	3 × 1.65	40.8	T50	C3	17	444.126+4233A		●	○	●	○
50	3 × 286	50/415/50/7/Dla	Al	3 × 0.83	81.5	T45	F6	30	458.260+4233A		●	○	●	○
50	3 × 286	50/415/50/7/Dla	Al	3 × 0.83	81.5	T45	F6	28	458.259+4233L0*		●	○	●	○
75	3 × 429	75/415/50/7/Dla	Al	3 × 0.55	122.4	T45	D4	38	468.159+4233A0		●	○	●	○
100	3 × 573	100/415/50/7/Dla	Al	3 × 0.41	163	T55	H1	65	4H0.218+4233A0		●		●	○
U_N 690 V	U_C > 760 V	p = 7 % (189 Hz)		I_{lin} 1.8 I_N										
25	3 × 52	25/690/50/7/Dla	Cu	3 × 4.57	24.5	T50	B4	16	444.097-6932A0		●	○	●	○
50	3 × 104	50/690/50/7/Dla	Al	3 × 2.29	49	T55	F5	29	458.259+6933A0		●	○	●	○
100	3 × 207	100/690/50/7/Dla	Cu	3 × 1.14	98	T55	D4	45	478.159-6932A		●	○	●	○

*Linearity 1.6 × I_N

FK-Dr

ADAPTED RATING (Dla)

5.67 %, 14 %

for latest edition and updates
check www.powercapacitors.info

Dla

Reactors for capacitors with adapted rating

Power Output Q_{LC} (U_N) (kvar)	Capacitor C_N (µF)	Reactor / Drossel type designation FK-Dr ...	winding	L_N (mH)	I_{eff} (A)	Temp. class	size (S.pg. 62)	weight (kg)	order code (standard version)	connection / design 1	2	3	A	B
U_N 400 V	U_C > 430V	p = 5.67 % (210 Hz)		I_{lin} 2.2 I_N										
12.5	3 × 77	12.5/400/50/5.67/Dla	Cu	3 × 2.49	23.3	T55	B2	9	428.094-40120	●	○	○	●	○
25	3 × 154	25/400/50/5.67/Dla	Cu	3 × 1.24	47.4	T55	C2	16.5	444.125-40120		●	○	●	○
25	3 × 154	25/400/50/5.67/Dla	Al	3 × 1.24	47.4	T55	C3	18	444.326+401300		●	○	●	○
50	3 × 308	50/400/50/5.67/Dla	Al	3 × 0.62	94.2	T50	D3	31	458.157+40130		●	○	●	○
75	3 × 462	75/400/50/5.67/Dla	Cu	3 × 0.41	140	T50	D4	42	468.159-40120		●		○	●
100	3 × 626	100/400/50/5.67/Dla	Al	3 × 0.31	190	T55	H1	69	4H0.218+401300		●	○	●	○
U_N 690 V	U_C > 760 V	p = 5.67 % (210 Hz)		I_{lin} 2.2 I_N										
25	3 × 52	25/690/50/5.67/Dla	Al	3 × 3.70	27.4	T55	C4	18	444.326+691300		●	○	●	○
50	3 × 104	50/690/50/5.67/Dla	Al	3 × 1.85	54	T55	D4	38	458.159+691300		●	○	●	○
U_N 400 V	U_C > 465 V	p = 14 % (134 Hz)		I_{lin} 1.6 I_N										
12.5	3 × 71	12.5/400/50/14/Dla	Cu	3 × 6.66	19.9	T55	C1	14	428.124-4052L		●	○	●	○
25	3 × 143	25/400/50/14/Dla	Cu	3 × 3.30	40	T55	C5	23	444.127-4052L		●	○	●	○
25	3 × 143	25/400/50/14/Dla	Al	3 × 3.30	40	T55	F4	23	444.258+4053L		●	○	●	○
50	3 × 285	50/400/50/14/Dla	Cu	3 × 1.66	80	T50	D3	43	458.157-4052L		●	○	●	○
50	3 × 285	50/400/50/14/Dla	Al	3 × 1.66	80	T50	D5	43	458.160+4053M0		●	○	○	●
U_N 690 V	U_C > 800 V	p = 14 % (134 Hz)		I_{lin} 1.6 I_N										
25	3 × 48	25/690/50/14/Dla	Cu	3 × 9.87	23.2	T50	C4	24	444.127-6952L		●	○	●	○
50	3 × 98	50/690/50/14/Dla	Cu	3 × 4.93	46.4	T50	D3	40	458.157-6952L0		●	○	●	○

● standard design
○ other available options

Other ratings, linearities and detuning factors are available on request.

POWER FACTOR CONTROLLERS

The quality of power supply is an important criterion for safe operation of modern technical equipment. In this context, the functionality of installations for power factor correction and their control and safety features gain a special bearing. Power factor correction banks have the ability to improve power quality, but they can also cause substantial problems.

Modern power factor controllers are self- optimizing and determine the correct power of the capacitor steps within a few trial switchings. If the cosφ deviates from the programmed limits, the necessary capacitor power for compensation is calculated and a suitable output or a combination of outputs are switched, considering the situation of supply system and power factor correction equipment.

A state-of-the-art power factor controller must also be in a position to monitor all relevant data of equipment and supply system, to alarm in case of overload and, if required, to switch off the whole equipment or capacitor steps temporarily or permanently.

PFR

PFR-M

POWER FACTOR CONTROLLERS

POWER FACTOR CONTROLLERS
PFR-X **R / PFR-M **T

for latest edition and updates
check www.powercapacitors.info

BECAUSE EXCELLENT CAPACITORS ARE NOT ENOUGH

The plug'n'play power factor controllers of our PFR-series calculate the active and reactive power in the mains from the measured current and voltage. Their intelligent control algorithm optimizes the switching sequences and guarantees for short regulation times with a minimum number of switchings. At the same time, equal distribution of switchings for capacitors of equal size extends the lifetime of the capacitors. The integrated connection control immediately detects in which phases voltage and current are measured, and adapts the entire system automatically. The very low current threshold of 15 mA allows for very reliable and exact PF control. 1 A as well as 5 A current transformers can be used without additional manual adjustments. The power supply of PFR-X covers a voltage range of 90...550 V, the PFR-M supply is rated for a voltage range of 207-253 V; it can easily be modified to 100-132 V by a jumper setting. The rated mains voltage is the only value to be entered before commencing operation. The controller blocks operation to protect the capacitors if the tolerances of this voltage setting are exceeded during operation. All other relevant parameters have been preset by the manufacturer for immediate start of operation in nearly any common configuration. Individual adjustment and optimization of the control parameters is possible at any time, even during operation of the equipment.
Once connected, the size of capacitors or reactors is detected automatically. The life cycle of capacitors is monitored via the degradation of capacitance, and a pre-failure alarm can be provided.

The controllers will operate correctly even if the value of the current transformer ratio has not been entered. Please note that in case of the PRF-X, all display functions related to current measurements will be disabled.

PFR-M can monitor the temperature inside the capacitor cabinet by means of an integrated sensor. For PFR-X, the sensor comes as an optional part which can simply be plugged onto the back of the case. It can activate a fan connected to one of the output relays (PFR-X)/the digital output (PFR-M), or switch off the capacitors if required. External thermostats may be connected in parallel to the integrated temperature sensor (PFR-X)/to the digital input (PFR-M) for monitoring of the temperature in other related cabinets.

For maintenance purposes, all branches can be switched manually.

Display
The backlit LC-Display delivers information about the equipment itself and about the mains conditions. It is also necessary for the controller setup.

Reported mains conditions
PFR-X: Voltage, THD U, current, active power, reactive power, apparent power, frequency, ΔQ (power to be compensated) , detailed voltage harmonics 3...19, cosφ
PFR-M: Voltage, THD U, current, THD I, active power, reactive power, apparent power, frequency, ΔQ (power to be compensated), detailed voltage and current harmonics 3...30, cosφ, counters

POWER FACTOR CONTROLLERS
PFR-X **R / PFR-M **T

Reported information on the equipment
Passed operation time (hours), number of switchings per branch, max temperature in the equipment, average power factor, actual power per branch, actual percentage of originally installed branch power.
The cosφ and status of branches are displayed permanently.

Monitoring
The monitoring functions ensure long and reliable operation of the capacitor equipment:
- zero-voltage tripping to avoid contactor fibrillation
- overvoltage protection
- over-temperature protection
- harmonic monitoring of voltage (PFR-M: voltage and current)
- detection of defect branches (with adjustable threshold value)
- alarm at under-compensation
- maintenance reminder
- fan control (using one of the branch outputs)
- overcurrent
- no current

PFR-M only:
- cosφ alarm
- frequency alarm
- overload Q
- overload P
- P export

Malfunctions and status signals of the equipment are indicated in the LC-Display. Malfunctions can also be transmitted through the isolated alarm relay (PFR-X: N-O contact, PFR-M: S-P-D-T contact) or to the digital output (PFR-M only).

Special Features of PFR-M
- Transistor outputs for the operation with thyristor switches (dynamic compensations)
- Optionally available with relay outputs or as hybrid version (PFR-M 12RT) with 6 relay outputs for static loads and 6 transistor outputs for dynamic loads.
- Fast algorithm for dynamic thyristor operation (switching time ~20 ms).
- Available with optional modbus communication
- Optional 3 phase current measurement

Modbus Option
The MODBUS extension of the PFR-M offers the possibility to read values from, and modify the settings of, the device. The PFR-M can transmit up to 30 values. The MODBUS-protocol doesn't restrict the user to one single physical transmission system. With the bus-capable RS485 interface of the PFR-M, it is possible to connect more than one controller to a single pair of wires and access the units by use of an ID number. Many commercial devices and PLCs are able to use the MODBUS protocol, either as bus master or slave. Various SCADA solutions are also available from a variety of vendors. So, the integration of the PFR-M in a new or existing bus-system is only a minor issue.

Type Range

Type	outputs	measurement	Order code
PFR-X 06R	6 relays	1ph	11091.100-06.R
PFR-X 12R	12 relays	1ph	11091.100-12.R
PFR-M 06T	6 transistors	1ph	11050.100-06.T
PFR-M 12T	12 transistors	1ph	11050.100-12.T
PFR-M 12RT	6 relays + 6 transistors	1ph	11050.100-12.H

DATA CHART

General Technical Data

Feature	PFR-X	PFR-M
Operation voltage	90-550 V rms, 45...65 Hz, 5 VA, 1 ph	230 V (optional 115 V) rms, 45...65 Hz
Measuring voltage	90-550 V rms	50-530V rms
No of output relays	6, 12	6, 12
Output rating	250 V / 5 A	8 ... 32 V DC hybrid option: also 250 V / 5 A
Switching delay	1 s ... 6500 s	20 ms
Display	LCD	graphic LCD
Operating elements	rubber buttons	foil keyboard
Measuring current	15 mA ... 6 A	15 mA ... 6 A
Adjustable transformer ratio	1 ... 9600	1 ... 6500
External Alarm contact	isolated relay, closed contact	isolated relay, changeover contact
Terminals	multiple contact plug (2.5 mm²)	multiple contact plug (2.5 mm²)
Fuses	to be installed externally (see manual)	to be installed externally (see manual)
Fan control	through branch output	digital output (DO)
Interface	TTL (back)	MODBUS RS485 (optional)
Ambient temperature	-20°C ... 70°C	0°C ... 70°C
Storage temperature	-20°C ... +85°C	-20°C ... +85°C
Humidity	0 % ... 95 % (no condensation)	
Temperature measurement	NTC	
Protection class Front	IP50 (IP54 with special gasket)	
Back	IP20	
Pollution degree	3 (DIN VDE 0110, Pt 1 / IEC60664-1)	
Mounting position	no restrictions	
Case Front	plastic (UL94: V0)	
Back	metal	
Dimensions H × W × D	144 × 144 × 58 mm (window size 138 × 138 mm)	
Weight	ca. 0.6 kg	
Standards	DIN VDE 0110 1 (IEC 60664-1:1992) VDE 0411 1 (IEC/DIN EN 61010-1:2001) VDE 0843 20 (IEC/DIN EN 61326: 1997 + A1:1998 +A2: 2000) GOST 15150-69 UL 508 – Industrial Control Equipment CSA C22.2 No. 14-M95 - Industrial Control Equipment	
Approval marks	UL, Rostest, c-UL	

CE Conformity
The controller is declared to conform to the following European Directives:
2014/35/EU Low-Voltage Directive
2004/108/EG EMC directive

ANNEX

zvei
electrifying ideas

Sicherheitshinweise

Allgemeine Sicherheitshinweise zur Verwendung von Starkstromkondensatoren

I. Geltungsbereich

Dieses Sicherheitsdatenblatt gilt für die im Folgenden genannten Starkstromkondensatoren und Normen. Damit soll der Stand der Technik, der im Regelfall bei allen einschlägigen Liefer- und Leistungsverträgen einzuhalten ist, beschrieben werden.

- Leistungskondensatoren für Blindstromkompensation (PFC) bis 1000 V
  IEC / DIN EN 60831 und 60931
- Leistungskondensatoren für Blindstromkompensation (PFC) über 1000 V
  IEC / DIN EN 60871
- Leistungskondensatoren für induktive Wärmeerzeugung (PFC)
  IEC / DIN EN 60110
- Kondensatoren für die Leistungselektronik (PEC)
  IEC / DIN EN 61071
- Kondensatoren für Bahnanwendungen (PEC)
  IEC / DIN EN 61881
- Leuchtenkondensatoren (AC)
  IEC / DIN EN 61048/49
- Motorkondensatoren (AC)
  IEC / DIN EN 60252
- Überspannungsschutzkondensatoren
  DIN VDE / 0560-3
  (derzeit keine gültige IEC)

II. Allgemeine Sicherheitsregeln

Starkstromkondensatoren sind elektrische Ladungsspeicher und deshalb stets mit Vorsicht zu handhaben. Sie können auch nach dem Abschalten über längere Zeiträume noch mit lebensgefährlich hohen Spannungen geladen sein. Gleiches gilt für alle Anlagenteile und Geräte, die in elektrisch leitender Verbindung zum Kondensator stehen. Grundsätzlich sind die allgemeinen Regeln der Elektrotechnik für den Umgang mit spannungsführenden Teilen in elektrischen Anlagen zu beachten.

III. Allgemeine Lager- und Einsatzbedingungen

- Grundsätzlich sind die Montage, Applikations- und Wartungshinweise des Herstellers und die einschlägigen Normen zu beachten.
- Kondensatoren dürfen zu keinem Zeitpunkt außerhalb der spezifizierten Temperaturbereiche gelagert oder eingesetzt werden.
- Kondensatoren dürfen nicht in korrosiver Atmosphäre gelagert oder betrieben werden, insbesondere dann nicht, wenn Chloride, Sulfide, Säuren, Laugen, Salze, organische Lösemittel oder ähnliche Substanzen auftreten.

- In staub- und schmutzgefährdeter Umgebung ist eine regelmäßige Kontrolle und Wartung, insbesondere der Anschlussklemmen und Isolatoren, unbedingt erforderlich um eine Kriechwegebildung zwischen potentialführenden Teilen untereinander und/oder zum Schutzleiter/Erde zu verhindern.
- Die im Datenblatt angegebenen maximalen Temperaturen (incl. Eigenerwärmung), Spannungen, Ströme, Leistungen, thermische Widerstände, Frequenzen, Entladezeiten und Schalthäufigkeiten sind einzuhalten.
- Für ausreichende Abführung der Verlustwärme (Belüftung, Kühlung) oder im Fehlerfall austretende Gase und Flüssigkeiten ist Sorge zu tragen. Geforderte Mindestabstände z. B. zu Wärmequellen sind einzuhalten.
- Angegebene Drehmomente für elektrische Anschlüsse und Befestigungselemente sind einzuhalten.
- Mechanisch oder elektrisch beschädigte, undichte oder anderweitig vorgeschädigte Kondensatoren dürfen nicht eingesetzt oder weiterverwendet werden.
- Vorhandene Schutzeinrichtungen der Kondensatoren dürfen nicht manipuliert, entfernt oder in ihrer Funktion beeinträchtigt werden.

IV. Schutzeinrichtungen

- Die folgende Tabelle gibt einen Überblick über die bekannten internen Schutzeinrichtungen:

Schutzeinrichtung / Schutzmechanismus	Anwendungsbereich		
	PEC	PFC	AC
Ohne Schutzeinrichtung	X		
Ausschließlich Selbstheilung[1)]	X	X	X
Einzeln oder in Kombination			
Verbesserte Selbstheilung[2)]	X		
Überdruckunterbrecher	X	X	X
Überdruckschalter	X	X	X
Überdruckventil	X	X	
Verstärktes Gehäuse	X	X	
Segmentierter Film	X	X	X
Wickelsicherung		X	X

Tabelle 1: Überblick über die bekannten internen Schutzeinrichtungen und Anwendungsbereiche
1) Selbstheilung kennzeichnet die Kondensatortechnologie. Selbstheilfähigkeit stellt noch keinen Schutzmechanismus dar!
2) Verbesserte Selbstheilung als Schutzmechanismus setzt voraus, dass die Schutzfunktion in einem gesonderten Test praktisch nachgewiesen wurde. Allerdings stellt auch eine verbesserte Selbstheilung keine z.B. mit einem Überdruckschalter vergleichbare Schutzeinrichtung dar, sondern reduziert lediglich signifikant die Ausfallwahrscheinlichkeit.

- Interne Schutzeinrichtungen bieten einen Basisschutz bei bestimmten inneren Fehlern, Alterungserscheinungen und Überlastfällen. Vorhandene Schutzeinrichtungen der Kondensatoren dürfen nicht manipuliert, entfernt oder in ihrer Funktion beeinträchtigt werden.
- Interne Schutzeinrichtungen sind allein nicht ausreichend, um alle im Fehlerfall denkbare Gefahren abzuwenden. Die so genannte Selbstheilfähigkeit darf nicht mit Ausfallsicherheit gleichgesetzt werden.
- Die meisten internen Schutzeinrichtungen können die Spannung nur innerhalb des Kondensators unterbrechen. Sie sind keine Sicherungen im klassischen Sinne wie Leitungs- oder Geräteschutzsicherungen, die die Spannung vor dem fehlerhaften Anlagenteil unterbrechen.
- Es ist empfehlenswert interne Schutzeinrichtungen durch externe Schutzeinrichtung zu ergänzen wie z. B.:
  - Kurzschlussschutz durch Sicherungen oder Leistungsschalter /Schutzrelais
  - Überlastschutz für Grund- und Oberschwingungen mittels Strommessung
  - Unsymmetrieschutz
  - Temperaturüberwachung

- Schutzeinrichtungen unterliegen, abhängig vom Schutzmechanismus, technischen und funktionellen Grenzen, deren Überschreitung zwangsläufig zu Fehlern führt. Solche Überschreitungen können sein: Übertemperatur, Überspannung, falsche Applikation, falsche Installation, mangelhafte Wartung, mechanische Beschädigung, Betrieb außerhalb der technischen Grenzen der Spezifikation.

V. Risikofaktoren für den Kondensator

Die Risikofaktoren, die am häufigsten zu Kondensatorschäden und möglicherweise auch zum Versagen der internen Schutzeinrichtungen führen, sind:

- Überschreiten der zulässigen Temperatur an der Kondensatoroberfläche (jede Temperaturerhöhung von 7° K halbiert die Lebenserwartung).
- Spannungserhöhungen, Überströme und hohe Einschaltströme, auch wenn sie nur kurzzeitig oder periodisch auftreten (eine dauerhafte Erhöhung der Betriebsspannung des Kondensators von 8 Prozent halbiert die Lebenserwartung).
- Netzoberschwingungen, Anregung von Resonanzen durch Oberschwingungen oder Flicker, auch wenn sie nur kurzzeitig oder periodisch auftreten.

  Alterungserscheinungen an Leuchtmitteln und damit verbundene Übertemperatur oder hohe UV-Belastung Ausfall anderer Bauelemente in einer gemeinsamen Schaltung und damit verbundene Überspannungen oder Überströme.
- Wechselwirkungen mit anderen Blindleistungselementen, auch parasitären Kapazitäten (Kabel) oder Induktivitäten, in gemeinsamen Schaltungen.
- Die bestandene Prüfung nach Kondensatornorm garantiert keine umfassende Sicherheit gegen Überlastungsmöglichkeiten.
  - Teilweise besteht für Kondensatoren ohne Schutzeinrichtungen der Kundenwunsch nach Sonderprüfungen mit extremen Überspannungen und Temperaturen zum Nachweis der Sicherheit.
  - Solche zusätzlichen, „Zerstörungsprüfungen“ genannten Tests, an selbstheilenden PEC-Kondensatoren ohne Schutzeinrichtung (unprotected) sind nicht IEC-konform und untauglich das Gefährdungspotential solcher Kondensatoren, bzw. deren Verhalten im Fehlerfall, zu bewerten.
  - Stattdessen sollten kritische Zustände von PEC-Kondensatoren, welche zum Ausfall führen könnten, z. B. durch eine geeignete Überwachung (Strom/Spannung/Temperatur) innerhalb der Anwendung erkannt werden.
- Beim Betrieb bestimmter thyristorgeschalteter Kondensatoranlagen können an den Kondensatoren nicht eingeschalteter Kompensationsstufen dauerhaft hohe Gleichspannungen auftreten. Diese DC-Spannungen sind bei der Auslegung der Kondensatoren sowie deren Entladeeinrichtungen zu berücksichtigen.

VI. Risiken im Fehlerfall

- Starkstromkondensatoren können aufgrund ihrer gespeicherten Energie und/oder ihrer Eigenschaften beim Betrieb in Netzen mit hohen Kurzschlussleistungen im Fehlerfall ein erhebliches Risiko darstellen.
  - Der Einsatz von immer größeren Kondensatoren, wie z.B. in Multilevel-HGÜ-Anwendungen (HGÜ: Hochspannungs- Gleichstrom-Übertragung), welche hin-sichtlich Größe, Anordnung und Anzahl von Kondensatoren besonders herausragen, bergen besondere Gefahren.
  - Für Energieinhalte von mehr als 30 kJ pro Kondensatoreinheit ist im Fehlerfall bei einer unkontrollierten Freisetzung dieser Energie von einer Potenzierung des Risikos auszugehen. Dies führt bei Anlagen mit mehreren Kondensatoreinheiten durch mögliche Lawineneffekte zu einem zusätzlichen Gefährdungspotenzial.
- Starkstromkondensatoren können bei fehlenden, falsch dimensionierten oder versagenden internen oder externen Schutzeinrichtungen aktiv ausfallen. Sie können platzen, brennen oder im Extremfall explodieren.
- Im Schadensfall austretende Gase (z. B. Kohlenwasserstoffe als Zersetzungsprodukte der eingesetzten organischen Isoliermaterialien) sind brennbar und können explosive Gemische ergeben. Das gilt auch für die aus internen Schutzeinrichtungen (Überdruckventil) austretenden Gase.
- Die Brandlast eines Starkstromkondensators beträgt ca. 40 MJ/kg. Dabei ist zu beachten, dass abhängig von der Größe und bezogen auf die Gesamtmasse des Kondensators bei kleinen Baugrößen etwa 55 Prozent und bei großen maximal 75 Prozent aus brennbaren Materialien bestehen.

VII. Risikominimierung

- Der Kondensatorhersteller kann nicht alle Belastungsmöglichkeiten eines Starkstromkondensators voraussehen und in der Konstruktion berücksichtigen. Hier trägt der Anwender entscheidende Mitverantwortung. Schon deshalb sollten bei der Kondensatorauswahl Sicherheit und Qualität an erster Stelle stehen. Deshalb ist dringend zu empfehlen, Kondensatoren mit entsprechenden internen Schutzeinrichtungen einzusetzen.
- Kondensatoren sind im Vorfeld der Anwendung auf ihre Eigung für den vorgesehenen Einsatzfall zu prüfen. Das gilt insbesondere dann, wenn der Kondensator durch seine räumliche Nähe zu Personen ein besonderes Gefährdungspotiontial aufweist, wie dies z.B. bei Traktionsanwendungen immer der Fall ist. In diesem Fall sind stets Kondensatoren mit Schutzrichungen bevorzugt zu verwenden. Bei der Risikobewertung / Eignungsprüfung sind alle Einflüsse (Parameter) zu berücksichtigen Das schließt auch mögliche Produktionsfehler des Kondensators und deren Auswirkungen auf die Sicherheit in der Anwendung mit ein. Die bedenkenlose Übernahme des Kondensators in eine Anwendung ohne konkrete Risikobewertung kann schwerwiegende Folgen für die Anlagensicherheit haben.
- Besonders bei sensiblen Anwendungen müssen die internen Schutzeinrichtungen der Kondensatoren vom Anwender durch geeignete externe Schutzmaßnahmen ergänzt werden. Externe Schutzmaßnahmen sind beim Einsatz von Kondensatoren ohne interne Schutzeinrichtungen sogar zwingend erforderlich.
- Grundsätzlich ist beim Einsatz von Leistungskondensatoren durch geeignete Maßnahmen dafür zu sorgen, dass sowohl im Betriebs-, als auch im Schadensfall keine Gefahren für Menschen, Tiere und Sachen entstehen. Dies gilt für Kondensatoren ohne und mit Schutzeinrichtungen. Dazu sind eine regelmäßige, fachgerechte Prüfung und Wartung erforderlich.
- Die im ZVEI organisierten Starkstromkondensatorhersteller sind gerne bereit, den Anwender schon im Vorfeld des Einsatzes zu beraten und konkrete Anwendungsempfehlungen zu geben sowie Serviceleistungen anzubieten.

Kontakt
Dr. Marcus Dietrich • Geschäftsführer Fachverband Power Capacitors and Power Quality •
Tel.: +49 69 6302462 • Mobil: +49 162 2664928 • E-Mail: marcus.dietrich@zvei.org

ZVEI e. V. • Verband der Elektro- und Digitalindustrie • Lyoner Straße 9 • 60528 Frankfurt am Main
Lobbyregisternr.: R002101 • EU Transparenzregister ID: 94770746469-09 • www.zvei.org

Datum: 16.03.2023

PACKING DETAILS

Capacitors

Type Box	L × B × H mm	Box/ pallet
FB 0	383 × 203 × 193	80
FB 2	383 × 203 × 148	80
FB 7	383 × 203 × 208	80
FB 8	393 × 153 × 270	84
FB 10	393 × 153 × 370	56
FB 12	393 × 153 × 330	56

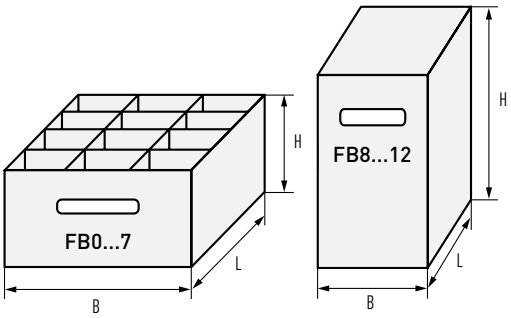

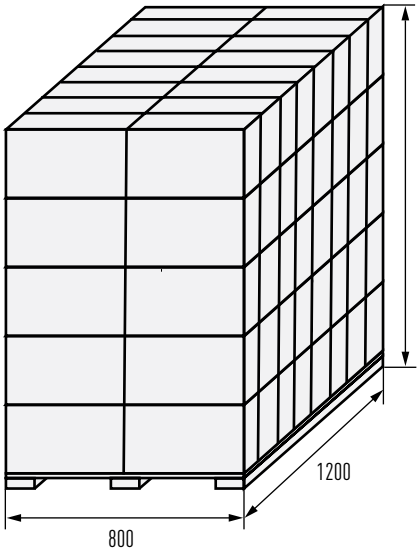

Box
Carton, sealed with adhesive paper tape

Pallet
Standard Euro-pallet
(fumigated if required), wrapped in PP-foil
air freight < 1600
see freight < 1800

Reactors

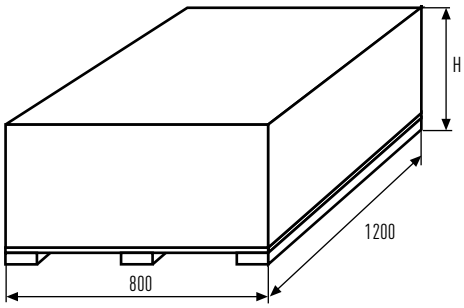

Pallet
Wooden frame on standard Euro-pallet
(fumigated if required)

NOTES

© 01/2025 ELECTRONICON Kondensatoren GmbH. All rights reserved. 200.003-020010
We reserve the right to make technical changes without prior notice. No liability can be assumed for the accuracy of data content.

Also available:
Capacitors for Power Electronics
AC and DC capacitors with integrated safety mechanism
E62 AC/DC E62-3ph AC Filter E63 DC
Low-inductance capacitors
E50 PK16™ DC E53 AC/DC E61 DC
Low-inductance High-voltage capacitors
E51
AC and DC capacitors with large capacitance
E56 DC E59 AC/DC E70 AC E50.U SR17™ DC
CAPACITORS
ELECTRONICON®
always in charge

EXCELLENT EXPERIENCE IN CAPACITOR MAKING FOR OVER 75 YEARS

Gera has been a centre of capacitor making since 1938. ELECTRONICON Kondensatoren GmbH which emerged from previous RFT/VEB ELEKTRONIK Gera in 1992, has become one of Europe's leading capacitor manufacturers supplying customers worldwide and being an open and competent partner for manufacturers and users of power factor correction equipment, for many manufacturers of drives, power electronics, home appliances, and for the lighting industry. Regular investments in advanced and environmentally sound technologies guarantee the highest levels in manufacture and quality to modern standards which are approved and monitored by leading certification authorities.

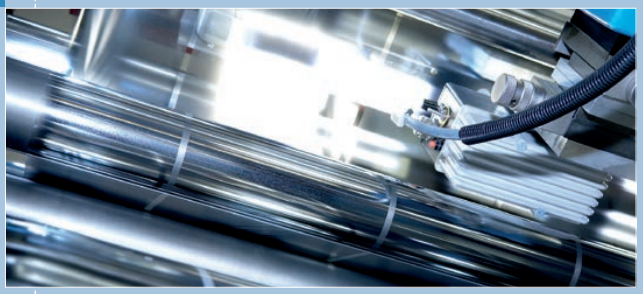

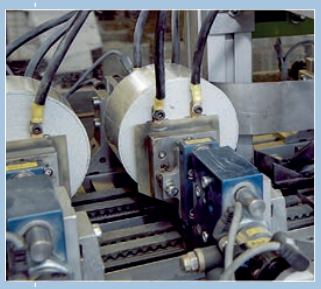

In today's globalised competition, we distinguish ourselves by

- Absolute reliability and safety of our products
- Close co-operation between manufacturer and client to meet both technical and commercial requirements
- Improvement and development of our technical expertise in capacitor design and manufacture, as well as film coating, with special attention paid to the MKPg-technology
- Early identification and incorporation of new trends and methods in the manufacturing of capacitors
- Flexibility and punctual fulfilment of our commercial obligations

Our experienced development engineers are competent and responsible for both implementing the latest technical trends applicable to our products and ensuring that our products adapt to the challenges of traditional and new markets. The close and intense co-operation between the departments of Marketing & Sales, Research & Development, and Production has become the keystone of our success. ELECTRONICON is continually striving to establish a similarly close and interactive relationship with its distributors and direct clients both in home and overseas markets, to become not just one out of many suppliers, but your preferred partner for ideas and solutions.

© ELECTRONICON Kondensatoren GmbH. All rights reserved. We reserve the right to make technical changes without prior notice. No liability can be assumed for the accuracy of data content. Issue 09/2024
ELECTRONICON®, GA85 Mesis®, PKmind® are registered trademarks of ELECTRONICON Kondensatoren GmbH. CAPAGRIP™ and SINECUT™ are trademarks of ELECTRONICON Kondensatoren GmbH.

ELECTRONICON®

Germany · 07549 Gera · Keplerstrasse 2
Fon +49 365 / 734 61 00 · Fax +49 365 / 734 61 10
E-Mail: sales@electronicon.com, www.electronicon.com

MADE IN GERMANY 100%